REVISIONS					
REV.	ECN NO.	LOCATION	DESCRIPTION	DATE	DESIGN
A0	N/A		INITIAL RELEASE	/	/
A1	N/A		图面升级整理图面	2024.9.28	阿树

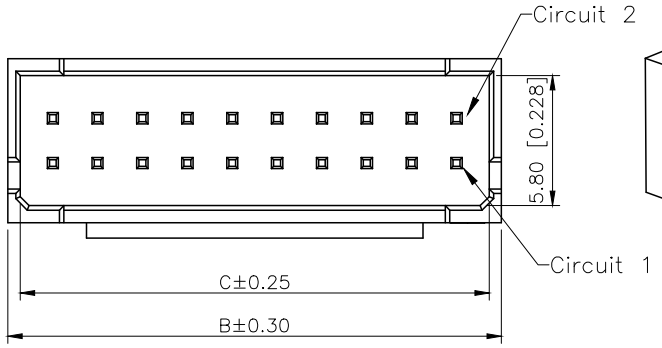

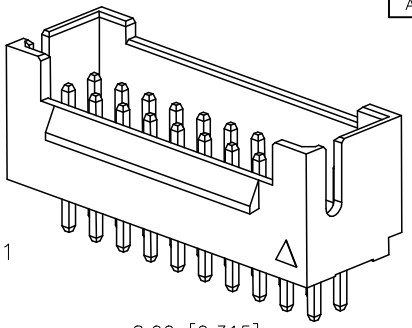

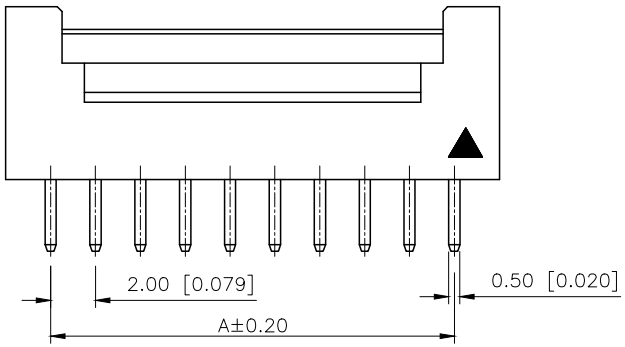

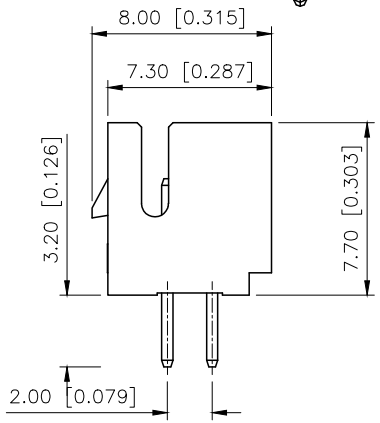

■SPECIFICATIONS
- •Voltage rating:250V AC/DC
- •Current rating:3A AC/DC
- •Withstanding Voltage:1000V AC/minute
- •Temperature range:−40°C~+125°C
- •Insulation resistance:≥1000MΩ
- •Contact resistance:≤30mΩ
- •After environmental testing:≤50mΩ

PART NO.:

X2026 W V−2x17 D−46 V03 XX
① ② ③ ④ ⑤ ⑥ ⑦ ⑧

①Series No
②Category:W−Wafer
③Welding Board Angle:V−Stright 180°
④Row No.Pin No:2xXX−2x02~2x30Pin
⑤Special No:D−With Lock
⑥Material:46−PA46 UL94V−0,9T−PA9T UL94V−0
9T−PA9T UL94V−0,
⑦Plating Category:SN−Bright Tin Plating
V03−ALL Gold−Plated 3U"
⑧Color:Blank−Natural Color

poles	Dimensions(mm)			poles	Dimensions(mm)			Poles	Dimensions(mm)		
	A	B	C		A	B	C		A	B	C
2x02	2.00	6.00	4.90	2x10	18.00	22.00	20.90	2x18	34.00	38.00	36.90
2x03	4.00	8.00	6.90	2x11	20.00	24.00	22.90	2x19	36.00	40.00	38.90
2x04	6.00	10.00	8.90	2x12	22.00	26.00	24.90	2x20	38.00	42.00	40.90
2x05	8.00	12.00	10.90	2x13	24.00	28.00	26.90	2x30	58.00	62.00	60.90
2x06	10.00	14.00	12.90	2x14	26.00	30.00	28.90				
2x07	12.00	16.00	14.90	2x15	28.00	32.00	30.90				
2x08	14.00	18.00	16.90	2x16	30.00	34.00	32.90				
2x09	16.00	20.00	18.90	2x17	32.00	36.00	34.90				

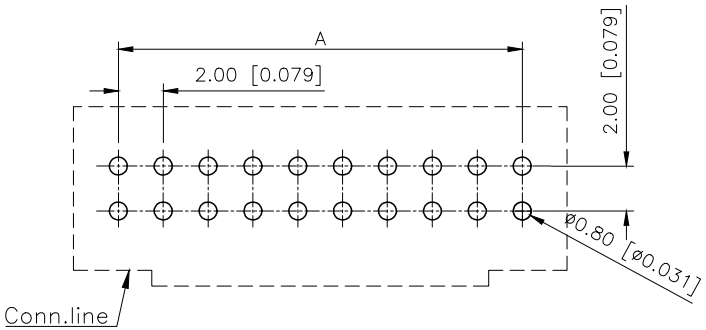

PCB LAYOUT

PART NO	Material	Material(Pin)	Finish(Pin)	Suitable XKB Housing
X2026WV−2x17D−4TSN	PA4T 94V−0	Brass	Tin−Plated	X2026H−D
X2026WV−2x17D−46V03	PA9T 94V−0		Gold−Plated 3u"	
X2026WV−2x17D−46SN	PA46 94V−0		Tin−Plated	

AuGLAR	±5°
X.	±0.40
X.x	±0.30
X.xx	±0.20
X.xxx	±0.15
UNSPECIFIED TOLERAuCES	

XKB Connection 星创

DESIGN	阿树	VIEW:	MODEL TYPE: 2.00mm Crimp Style Connector
CHECKED		UNIT: mm/in	PART NO.: X2026WV−2x17D−46V03
APPROVED		SIZE: A4	DWG NO.: X−X2026WV−2x17D−46V03

XKB INDUSTRIAL PRECISION CO.,LIMITED

SCALE	PAGE	REVISION
N/A	1/1	A1