REVISIONS					
REV.	ECN NO.	LOCATION	DESCRIPTION	DATE	DESIGN
A0	N/A		INITIAL RELEASE	/	/
A1	N/A		图面升级整理图面	2025.12.23	阿树

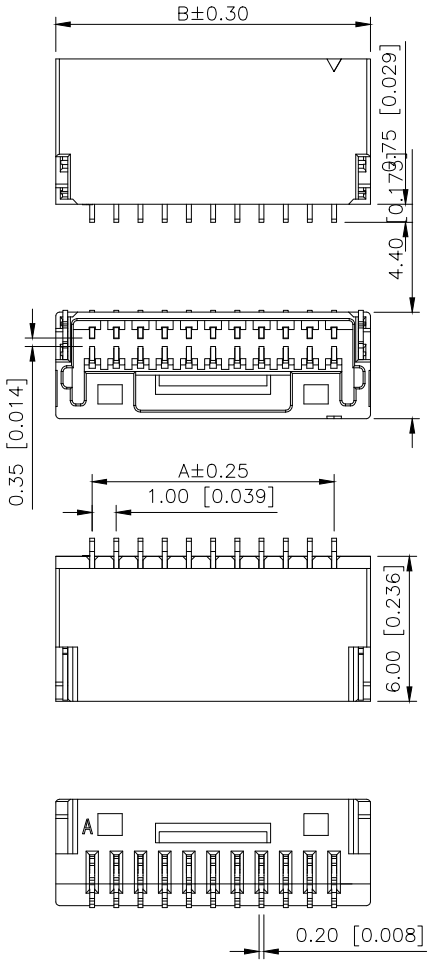

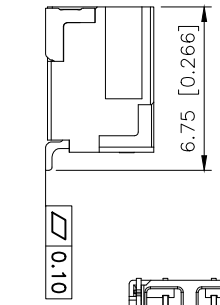

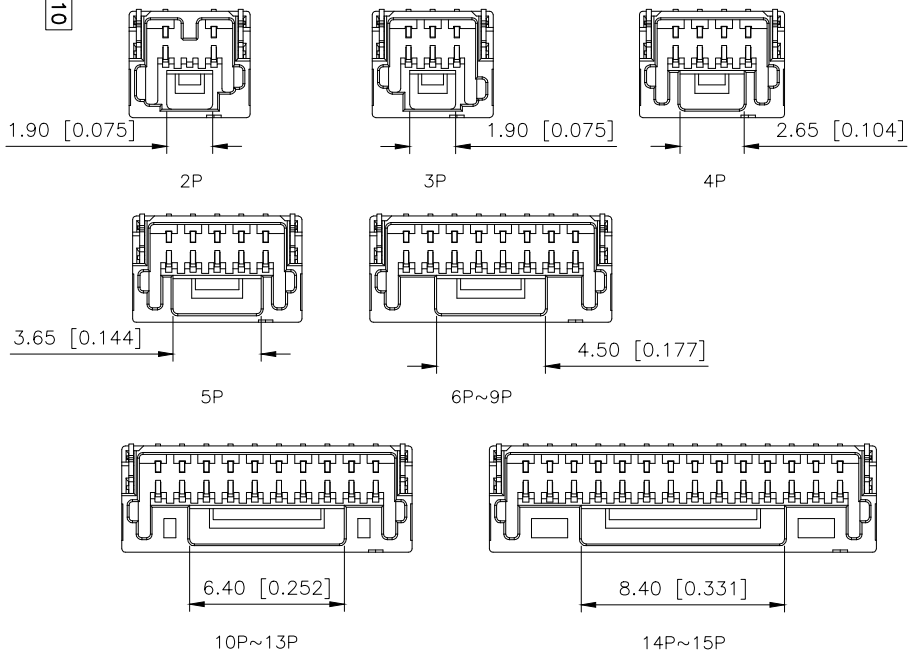

■SPECIFICATIONS
- •Voltage rating:50V AC,DC
- •Current rating:1A,AC,DC
- •Withstanding Voltage:500V AC/minute
- •Insulation resistance:100MΩ min
- •Temperature range:−45°C+95°C
- •Contact resistance:20mΩ max

PART NO.:

X1010 W R S−02−LP SN
① ② ③ ④ ⑤ ⑥ ⑦

①Series No
②Category:W−Wafer
③Welding Board Angle:R−Stright 90°
④Welding Way: S−SMT
⑤Row No.Pin No:XX−02~15Pin
⑥Material:LP−LCP UL94V−0
⑦Planting: SN−Tin−Plated
V01−Gold Flsh

PART NO.	Dimensions (mm)	
	A	B
02P	2.00	5.00
03P	2.00	5.00
04P	3.00	6.00
05P	4.00	7.00
06P	5.00	8.00
07P	6.00	9.00
08P	7.00	10.00
09P	8.00	11.00
10P	9.00	12.00
11P	10.00	13.00
12P	11.00	14.00
13P	12.00	15.00
14P	13.00	16.00
15P	14.00	17.00

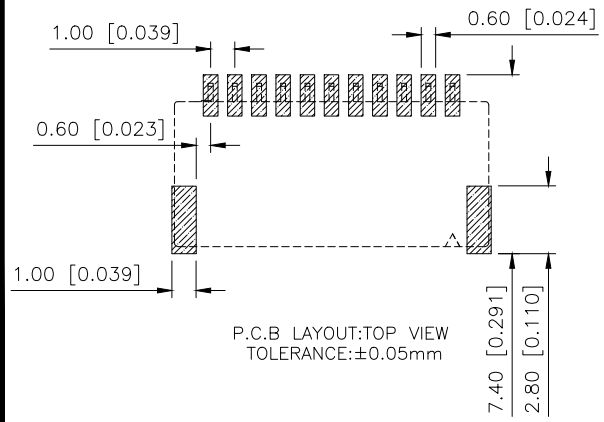

P.C.B LAYOUT:TOP VIEW
TOLERANCE:±0.05mm

X1010WRS−02−LPSN	LCP	Brass	X1010H
PART NO	Material	Material(Pin)	Suitable XKB Housing

AuGLAR	±5°
X.	±0.40
X.x	±0.30
X.xx	±0.20
X.xxx	±0.15
UNSPECIFIED TOLERAuCES	

XKB Connection 星创

DESIGN	阿树	VIEW:	MODEL TYPE: 1.0mm Crimp Style Housing
CHECKED		UNIT: mm/in	PART NO.: X1010WRS−02−LPSN
APPROVED		SIZE: A4	DWG NO.:

XKB INDUSTRIAL PRECISION CO.,LIMITED

SCALE	PAGE	REVISION
N/A	1/1	A1