REVISIONS					
REV.	ECN NO.	LOCATION	DESCRIPTION	DATE	DESIGN
A0	N/A		INITIAL RELEASE	/	/
A1	N/A		图面升级整理图面	2025.01.07	阿树

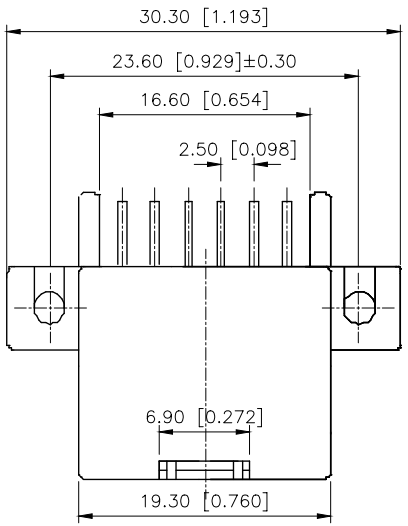

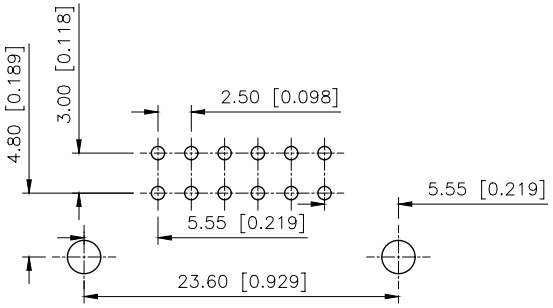

PCB LAYOUT

Current rating:3A AC/DC
额定电流：3A AC/DC
Temperature range:−40℃−+125℃
温度范围：−40℃−+125℃

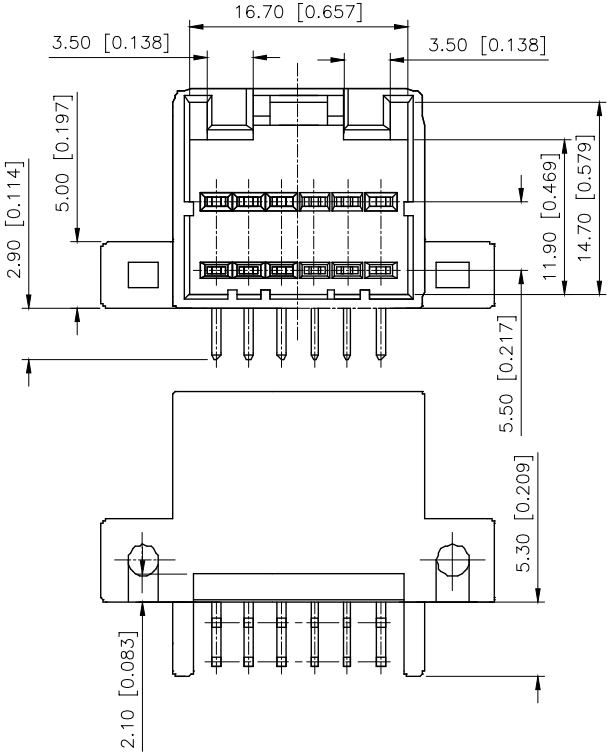

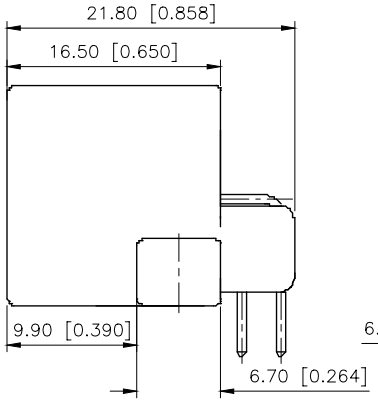

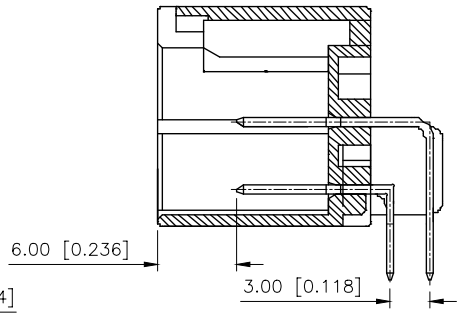

PART NO.:

K 174051 W R−2xXX−PT SN
① ② ③ ④ ⑤ ⑥ ⑦

①K:XKBTEK−Car Connector
②XKB Series No
③Category:W−Wafer
④Welding Board Rangle:R−Stright 90°
⑤Row No.Pin No:2xXX−2x06 Pin
⑥Material:PT−PBT
⑦Palting:SN−Plated Tin

PART NO	Material	Material(Pin)	Suitable XKB Housing
K174051WR−2x06−PTSN	PBT	Brass	K174051H

AuGLAR	±5°
X.	±0.40
X.x	±0.30
X.xx	±0.20
X.xxx	±0.15
UNSPECIFIED TOLERAuCES	

XKB 星创 Connection

DESIGN	阿树	VIEW:	MODEL TYPE: 2.5mm Automobile connector
CHECKED		UNIT: mm/in	PART NO.: K174051WR−2x06−PTSN
APPROVED		SIZE: A4	DWG NO.:

XKB INDUSTRIAL PRECISION CO.,LIMITED

SCALE	PAGE	REVISION
N/A	1/1	A1

www.helloxkb.com www.helloxkb.cn www.xk−dg.cn