REVISIONS					
REV.	ECN NO.	LOCATION	DESCRIPTION	DATE	DESIGN
A0	N/A		INITIAL RELEASE	/	/
A1	N/A		图面升级整理图面	2024.12.16	阿树

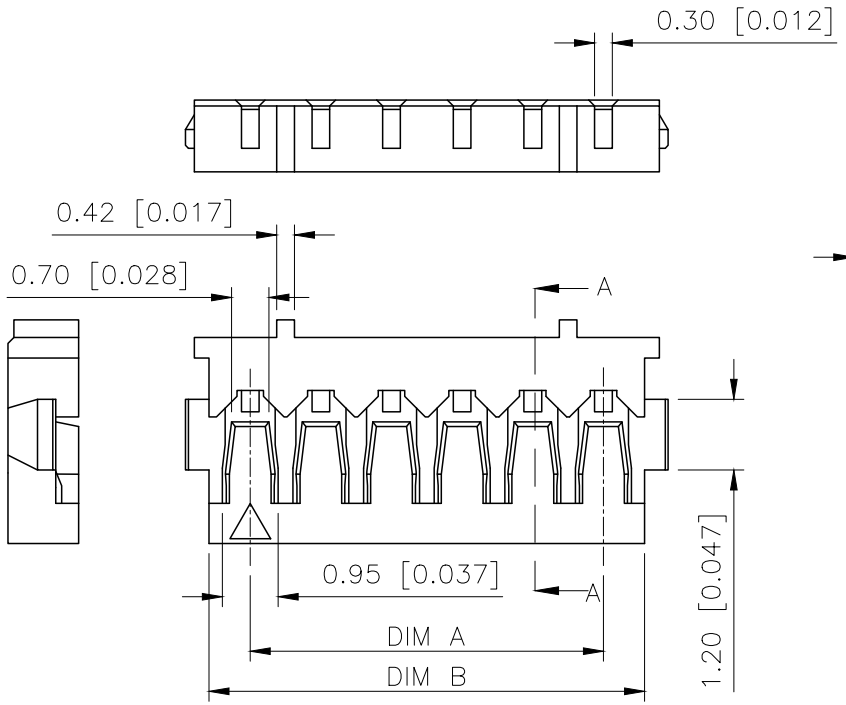

4P–15P

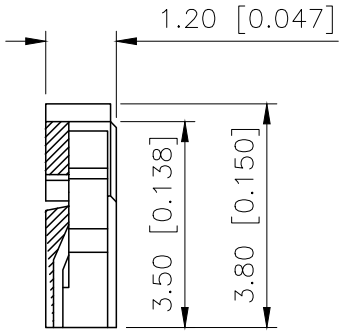

SECTION A–A

Specifications:
Voltage rating:50V AC/DC
Current rating:2A AC/DC
Withstanding voltage:500V AC/minute
Temperature range:–40℃–+125℃
Insulation resistance:≥100MΩ MIN
Contact resistance:20mΩ MAX
After environmental testing: 20mΩ Max

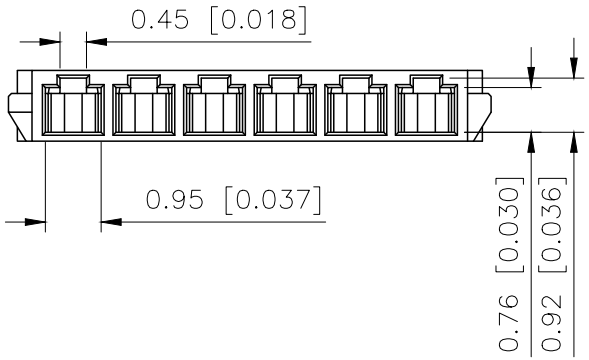

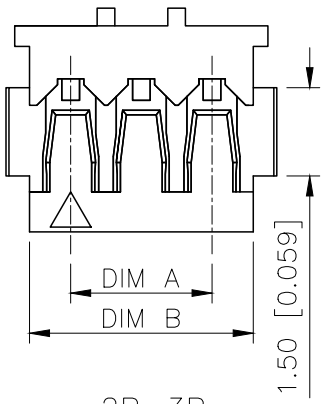

2P–3P

PART NO.:

X1203 H–02–N0 BK
① ② ③ ④ ⑤

①Series No
②Category:H–HSG
③Row No.Pin No:XX–02~15Pin
④Material:N0–Nylon66 UL94V–0
⑤Color:W–White;BK–Black

PIN	Dimensisons (mm)	
	A	B
1	/	1.40
2	1.20	2.60
3	2.40	3.80
4	3.60	5.00
5	4.80	6.20
6	6.00	7.40
7	7.20	8.60
8	8.40	9.80
9	9.60	11.00
10	10.80	12.20
11	12.00	13.40
12	13.20	14.60
13	14.40	15.80
14	15.60	17.00
15	16.80	18.20

AuGLAR	±5°
X.	±0.40
X.x	±0.30
X.xx	±0.20
X.xxx	±0.15
UNSPECIFIED TOLERAuCES	

XKB Connection 星创

DESIGN	阿树	VIEW:	MODEL TYPE: 1.20mm Crimp Style Connectors
CHECKED		UNIT: mm/in	PART NO.: X1203H–02–N0BK
APPROVED		SIZE: A4	DWG NO.: X–X1203H–02–N0BK

XKB INDUSTRIAL PRECISION CO.,LIMITED

SCALE	PAGE	REVISION
N/A	1/1	A1