REVISIONS					
REV.	ECN NO.	LOCATION	DESCRIPTION	DATE	DESIGN
A0	N/A		INITIAL RELEASE	/	/
A1	N/A		图面升级整理图面	2025.06.06	阿树

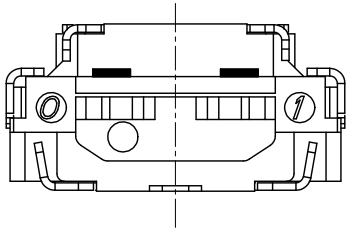

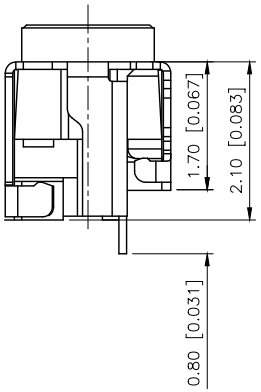

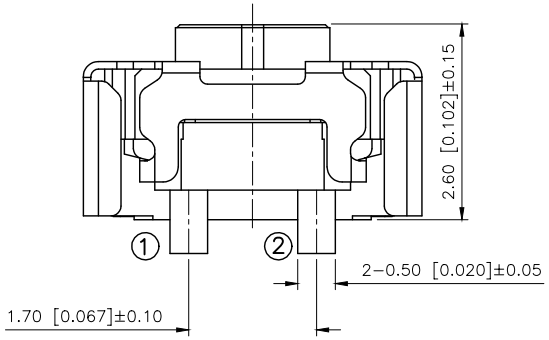

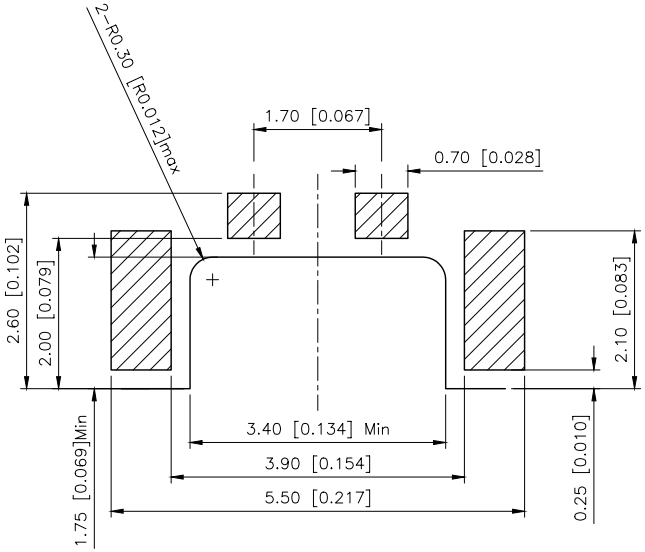

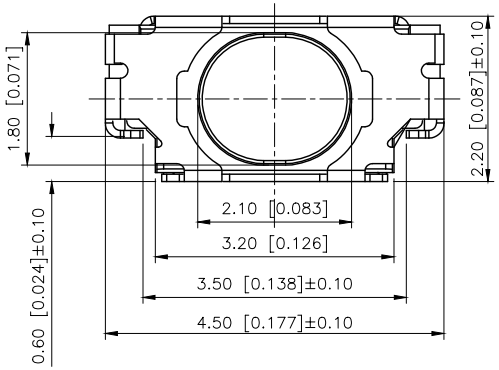

Circuit Diagram

SPECIFICATION
Contact Rating:50mA,12V DC
Contact Resistance:100MΩ min.500V DC
Dielectric Strength:250V AC/1minute

2.6mm	BLACK	BLACK	220±50gf	600000 Cycles
H	STEM COLOR	BASE COLOR	O/FORCE	LIFE

AuGLAR	±5°
X.	±0.40
X.x	±0.30
X.xx	±0.20
X.xxx	±0.15
UNSPECIFIED TOLERAuCES	

XKB Connection 星坤

DESIGN	阿树	VIEW:	MODEL TYPE: TACT SWITCH
CHECKED		UNIT: mm/in	PART NO.: TS−1848FP
APPROVED		SIZE: A4	DWG NO.: TS−1848FP

XKB INDUSTRIAL PRECISION CO.,LIMITED

SCALE	PAGE	REVISION
N/A	1/1	A1

www.helloxkb.com www.helloxkb.cn www.xk−dg.cn