REVISIONS					
REV.	ECN NO.	LOCATION	DESCRIPTION	DATE	DESIGN
A0	N/A		INITIAL RELEASE	/	/
A1	N/A		图面升级整理图面	2025.04.30	阿树

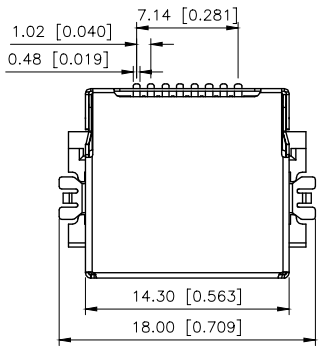

TOP VIEW

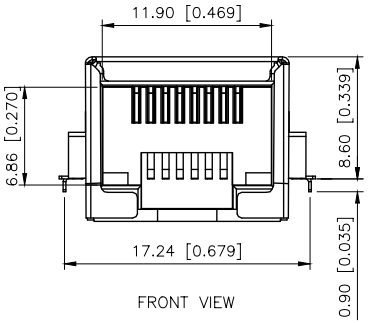

FRONT VIEW

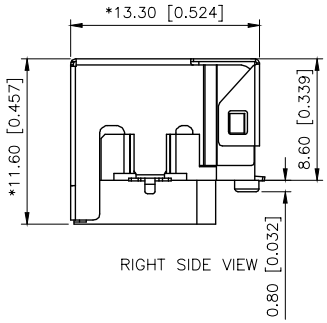

RIGHT SIDE VIEW

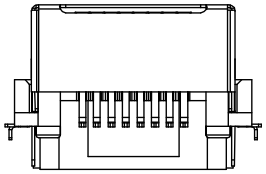

BACK VIEW

MATERIAL 材料:
HOUSING 外壳: LCP,UL94V-0,BLACK.
TERMINAL 端子: PHOSPHOR BRONZE ,ø=0.35MM,
GOLD PLATING ON CONTACT AREA.
SHIELD:C2680,T=0.20MM,20U" MIN NICKEL PLATING
ON ALL AREA.

MECHANICAL 机械:
DURABILITY 耐用性: 750 CYCLES MIN.12.5MM/MINUTE
INSERTION FORCE 插入力: 2.2KG.F MAX
RETENTION STRENGTH 固位力:7.7KG.F BETWEEN JACK AND PLUG
OPERATING TEMPERATURE 工作温度: -40°C~+85°C.
STORAGE TEMPERATURE 储存温度: -40°C~+85°C.
ALL CRITICAL DIMENSIONS WITH "*"

ELECTRICAL 电动:
VOLTAGE 电压:125 VOLTS AC
CURRENT RATING 额定电流:1.5AMP
DIELECTRIC STRENGTH 介电强度:1000 VAC RMS 50HZ OR 60HZ,1MIN
INSULATION RESISTANCE 绝缘电阻:500 MEGA OHMS MIN.INITIAL
AFTER 500V DC FOR 1 MINUTE
CONTACT RESISTANCE 接触电阻:SINGLE TERMINAL 30 MILLIOHMS MAX
INITIAL 50 MILLIOHMS MAX.AFTER
DURABILITY TEST

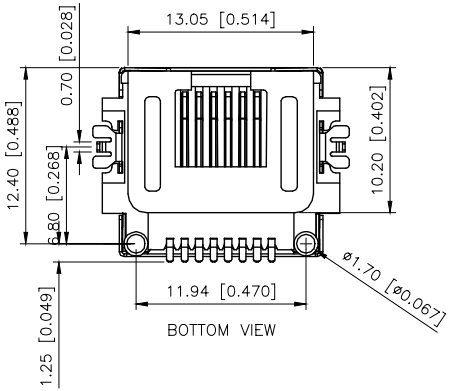

BOTTOM VIEW

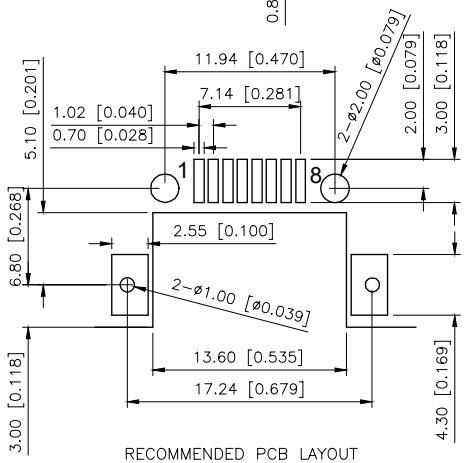

RECOMMENDED PCB LAYOUT
VIEWED FROM COMPONENT SIDE

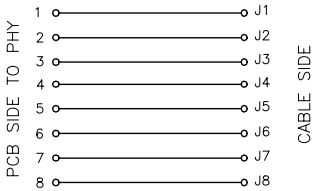

X38ADGWA6SB1075

1:Au=1U"
3:Au=3U"
4:Au=6U"
5:Au=15U"
6:Au=30U"

AuGLAR	±5°
X.	±0.40
X.x	±0.30
X.xx	±0.20
X.xxx	±0.15
UNSPECIFIED TOLERAuCES	

XKB 星创 Connection

DESIGN	阿树	VIEW:	MODEL TYPE: RJ JACK
CHECKED		UNIT: mm/in	PART NO.: X38ADGWA6SB1075
APPROVED		SIZE: A4	DWG NO.: X-X38ADGWA6SB1075

XKB INDUSTRIAL PRECISION CO.,LIMITED

SCALE	PAGE	REVISION
N/A	1/1	A1