REVISIONS					
REV.	ECN NO.	LOCATION	DESCRIPTION	DATE	DESIGN
A0	N/A		INITIAL RELEASE	/	/
A1	N/A		图面升级整理图面	2024.11.28	阿树

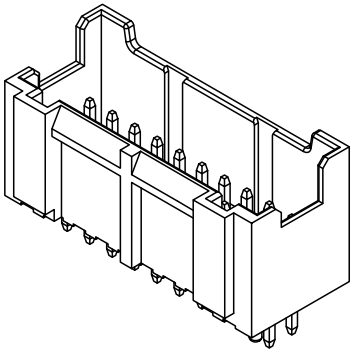

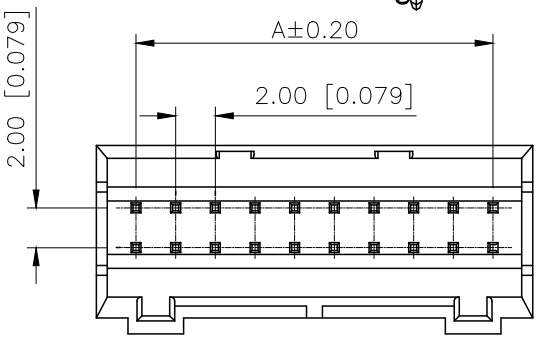

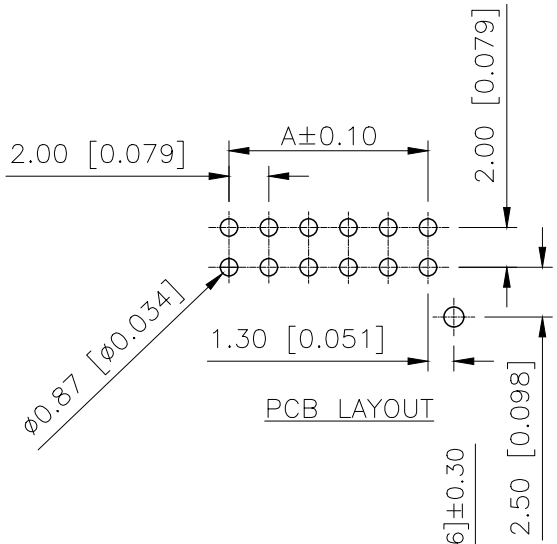

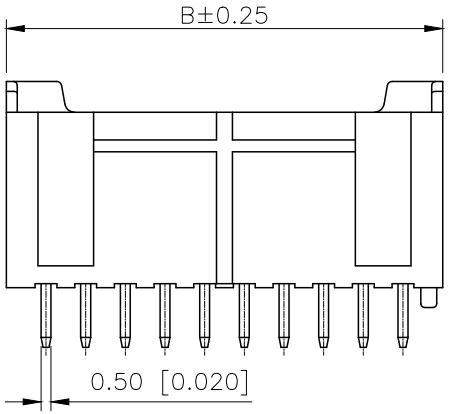

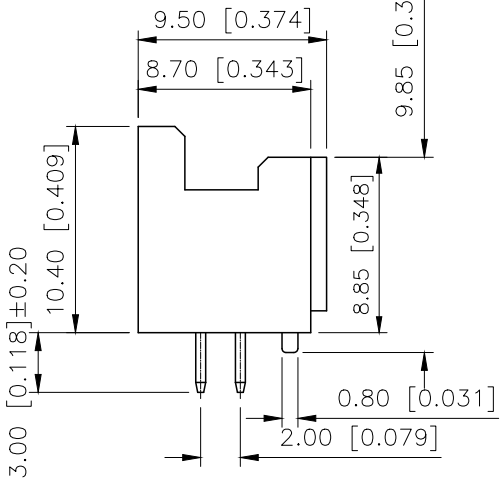

Specifications:
规格：
Voltage rating:250V AC/DC
额定电压：250V AC/DC
Current rating:3A AC/DC
额定电流：3A AC/DC
Withstanding voltage:800V AC/minute
耐受电压：800V AC/分钟
Temperature range:−40℃−+125℃
温度范围：−40℃−+125℃
Insulation resistance:1000MΩ min
绝缘电阻：1000MΩ Min
Contact resistance:20mΩ Max
接触电阻：20mΩ Max

PART NO.:

X2015 W V−2x13−46 SN
① ② ③ ④ ⑤ ⑥

①Series No
②Category:W−Wafer
③Welding Board Angle:V−Stright 180°
④Row No−Pin No:2xXX−2x02~2x20Pin
⑤Material:46−Nylon46 UL94V−0
⑥Plating Category:SN−Tin Plating

Poles	Dimensions(mm)		Poles	Dimensions(mm)	
	A	B		A	B
2x02	2.00	6.00	2x08	14.00	18.00
2x03	4.00	8.00	2x09	16.00	20.00
2x04	6.00	10.00	2x10	18.00	22.00
2x05	8.00	12.00	2x11	20.00	24.00
2x06	10.00	14.00	2x12	22.00	26.00
2x07	12.00	16.00	2x20	38.00	42.00

X2015WV−2x13−46SN	Nylon46	Brass	X2015H
PART NO	Material	Material(Pin)	Suitable XKB Housing

AuGLAR	±5°
X.	±0.40
X.x	±0.30
X.xx	±0.20
X.xxx	±0.15
UNSPECIFIED TOLERAuCES	

XKB 星创 Connection

DESIGN	阿树	VIEW:	MODEL TYPE: 2.00mm Crimp Style Connectors
CHECKED		UNIT: mm/in	PART NO.: X2015WV−2x13−46SN
APPROVED		SIZE: A4	DWG NO.:

XKB INDUSTRIAL PRECISION CO.,LIMITED

SCALE	PAGE	REVISION
N/A	1/1	A1