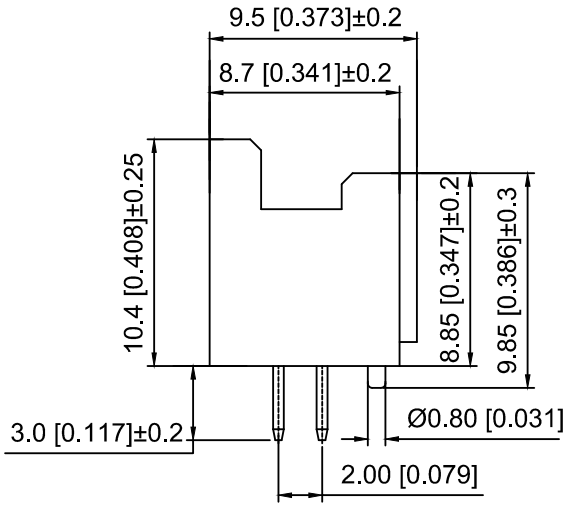

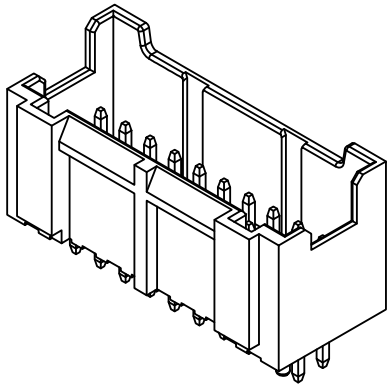

Specifications:
规格：
Voltage rating:250V AC/DC
额定电压：250V AC/DC
Current rating:3A AC/DC
额定电流：3A AC/DC
Withstanding voltage:800V AC/minute
耐受电压：800V AC/分钟
Temperature range:-25℃-+85℃
温度范围：-25℃-+85℃
Insulation resistance:1000MΩ min
绝缘电阻：1000MΩ Min
Contact resistance:20mΩ Max
接触电阻：20mΩ Max

X2015 W V - 2x04 - 46 SN
① ② ③ ④ ⑤ ⑥

1.Series No
2.Category:W-Wafer
3.Welding Board Angle:V-Stright 180°
4.Row No.Pin No:2xXX-2x02~2x20P
5.Material:46-Nylon46 UL94V-0
6.Plating:SN-Tin Plated

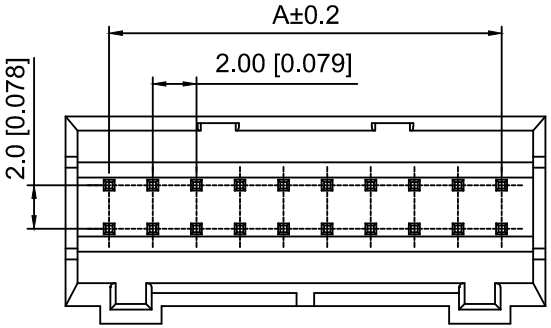

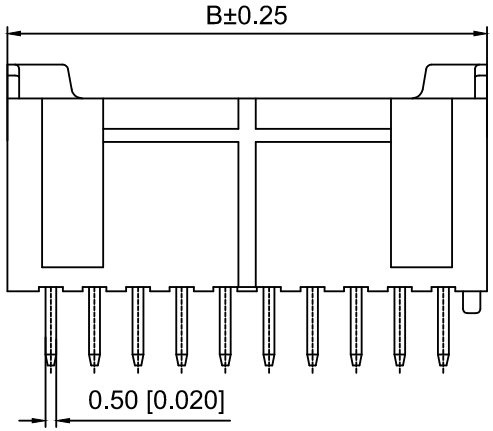

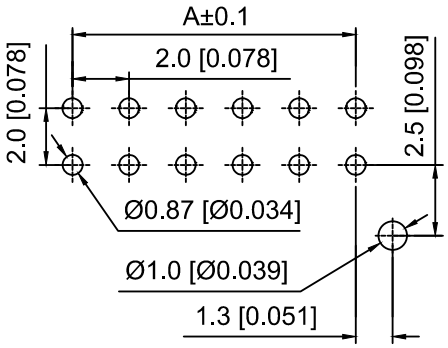

PCB LAYOUT

Poles	Dimensions(mm)		Poles	Dimensions(mm)	
	A	B		A	B
2x02	2.00	6.00	2x08	14.00	18.00
2x03	4.00	8.00	2x09	16.00	20.00
2x04	6.00	10.00	2x10	18.00	22.00
2x05	8.00	12.00	2x11	20.00	24.00
2x06	10.00	14.00	2x12	22.00	26.00
2x07	12.00	16.00	2x20	38.00	42.00

X2015WV-2x04-46SN	Nylon46	Brass	X2015H
PART N0	Material	Material(Pin)	Suitable XKB Housing

MARK	DESCRIPTION	DATE	REVISED	APPROVED
ΔX				
ΔX				
ΔX				

REVISIONS

ANGLAR	±5°
L≤ 4	±0.2
4<L≤ 16	±0.3
16<L≤ 63	±0.4
L> 63	±0.5

UNSPECIFIED TOLERANCES

www.helloxkb.com www.helloxkb.cn www.xk-dg.cn

XKB INDUSTRIAL PRECISION CO.,LIMITED

DSND		SCALE: N/A	MODEL TYPE: 2.0mm Crimp Style Connector
DWN		VIEW:	PART NO.: X2015WV-2x04-46SN
CHKD		UNIT: mm/in	DWG NO.: X-X2015WV-2x04-46SN
APPD		SIZE: A4	

WEIGHT	SHEET	REVISION
	1/1	A0