HSF Pb RoHS

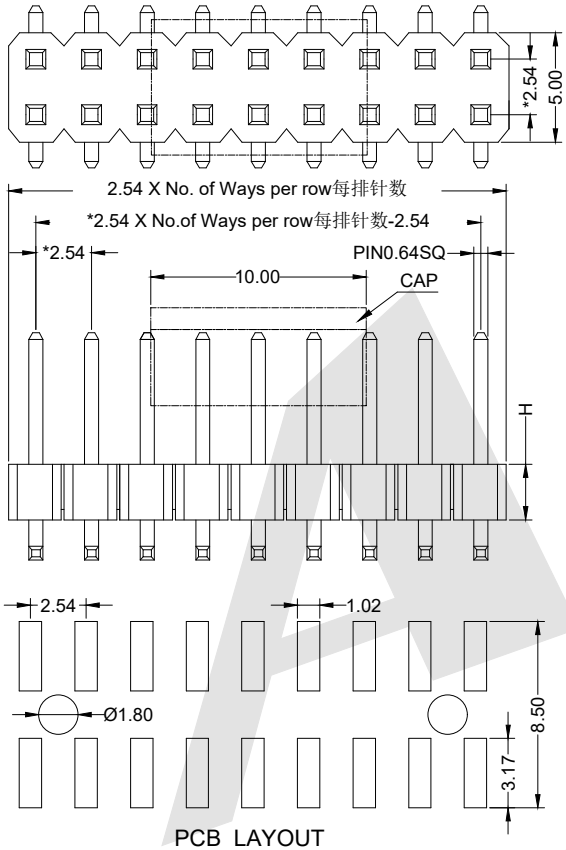

PCB LAYOUT

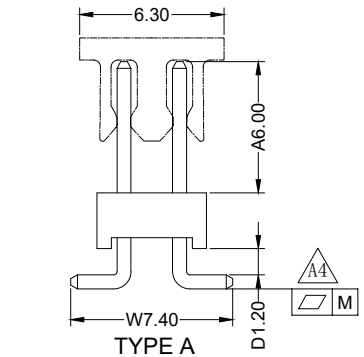

TYPE A

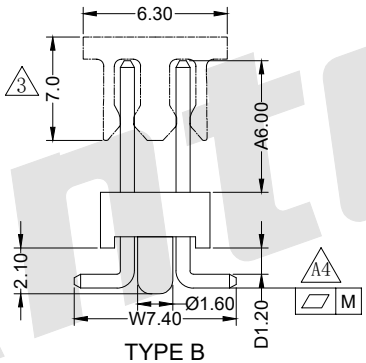

TYPE B

SPECIFICATION规格

Current Rating额定电流:	3 Amp
Insulation Resistance绝缘电阻:	1000M ohms min
Contact Resistance接触电阻:	20M ohms max
Dielectric Withstanding耐电压:	AC交流 500V
Operating Temperature工作温度:	-65°C to +125°C
Contact Material端子材料:	Brass
Insulator Material胶芯材料:	PA6T,UL 94V-0 Black黑色

The size marked with "*" is the key size.带"*"尺寸为重点尺寸

Ordering Code订单编号:

PHEM09-08-G0-D-0600-0230-0750-B-T-A-H2

① ② ③ ④ ⑤ ⑥ ⑦ ⑧ ⑨

①Series No系列号:

②No.of Contacts 端子数
02 To 04

③Contact Plating端子电镀:
G0:Gold flash/普金 S0:Selective/半金锡
G1:3U" Gold/金 S1:Selective/半金锡 3u"
G2:5u" Gold/金 S2:Selective/半金锡 5u"
G3:10u "Gold/金 S3:Selective/半金锡 10u"
G4:15u" Gold/金 S4:Selective/半金锡 15u"
G5:30u" Gold/金 S5:Selective/半金锡 30u"
SN:Tin 锡

④Connector Type 类型
D:Dual双排

⑤Pin Length针长:
A:0600=6.00mm
D:0230=2.3mm
W:0750=7.50mm
Please mark the desired length in the A/D/W
请确认需要的针长

⑥ Insulator Material 绝缘材料
A:PBT
B:PA6T
C:LCP
D:PA46
E:PA9T

⑦ Packing 包装方式
A:Tray吸塑盒装 B:Bag 袋装
T:Tube管装 U:Tube+CAP管装带加持盖
R:Tape&Reel卷装
W:Tape&Reel+CAP卷装加盖

⑧ With locating pegs option定位柱选项
A:Type A without pegs 不带定位柱
B:Type B with pegs 带定位柱

⑨ Plastic High H 塑胶高度
H1:1.70mm
H2:2.54mm
H3:2.00mm
H4:1.50mm 2

A4

Pin(Per Row)	2-15P	16-25P	26-40P
M	0.10	0.15	0.20

Standard IE P/N : PHEM09-08-G0-D-0600-0230-0750-B-T-A-H2

A	D	W
6.00	1.20	7.40
Optional		

Unless Otherwise specified tolerance
X.±0.35 X.XX:±0.20
X.X:±0.25 X.XXX:±0.15

SCALE: As Shown
UNIT: mm
DRAW YUJUNJI DATE 2026/01/31
CHECK BobYang DATE 2026/01/31

3rd ANGLE PROJECTION

Antenk ® ANTENK ELECTRONICS CO,.LTD
Http://www.antenk.com
E-mail:sales@antenk.com

TITLE: 2.54mm Pin Header Dual Row SMT Type
2.54mm 排针双排SMT

DRAWING NO: PHEM09-08-G0-D-0600-0230-0750-B-T-A-H2
PRODUCT NO: PHEM09-08-G0-D-0600-0230-0750-B-T-A-H2

REV	DESCRIPTION	DATE
A4	Increase the flatness	2026/01/31
3	Revise Cap Height 修正加持盖高度	09/22/2022
2	ADD 增加 H4=1.5MM	2017/04/18