REVISIONS					
REV.	ECN NO.	LOCATION	DESCRIPTION	DATE	DESIGN
A0	N/A		INITIAL RELEASE	/	/
A1	N/A		图面升级整理图面	2025.2.20	阿树

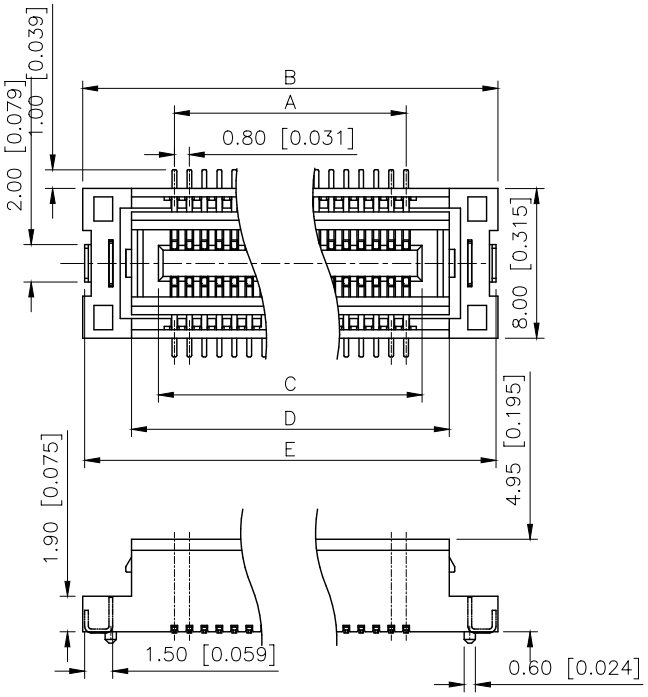

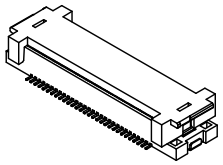

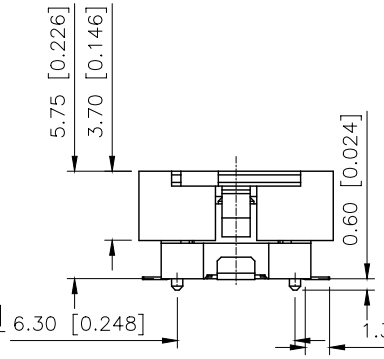

Specifications:
规格:
Voltage rating:50V AC/DC
额定电压：50V AC/DC
Current rating:0.5A AC/DC
额定电流：0.5A AC/DC
Withstanding voltage:250V AC/minute
耐受电压：250V AC/分钟
Temperature range:−40℃−+105℃
温度范围：−40℃−+105℃
Insulation resistance:500MΩ
绝缘电阻：500MΩ
Contact resistance:100mΩ
接触电阻：100mΩ

PART NO.:

X0815 F V S−60 B S−9T V01
① ② ③ ④ ⑤ ⑥ ⑦ ⑧ ⑨

①Series No
②Category:F−Female
③Welding Board Angle:V−Stright 180°
④Welding Way: S−SMT
⑤Row No.Pin No:XX−10−100Pin
⑥Category:B−4.95mm Height
⑦Special No:S−With positioning column
⑧Material:9T−PA9T UL94V−0
CAP Material:PA6T UL94V−0
⑨Plating:Gold Plated 4u" MIN

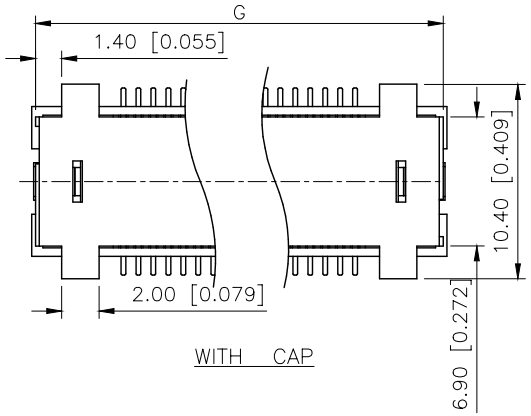

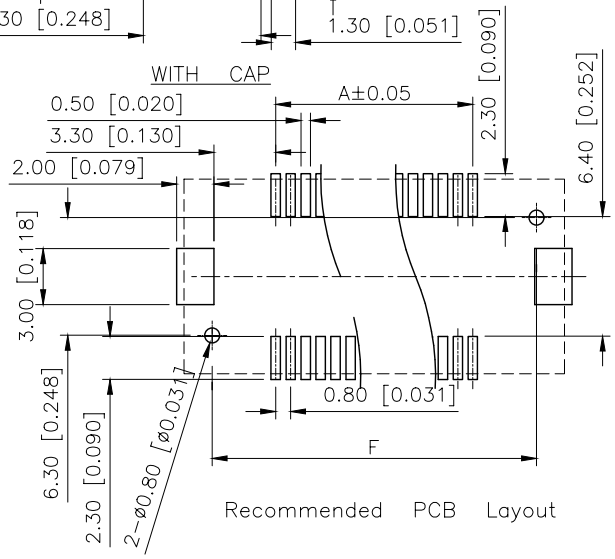

PART NO	Suitable XKB Wafer	Mating Height
X0815FVS−60BS−9TV01	X0815WVS−XXBS−9TV01	8.0mm±0.5
	X0815WVS−XXCS−9TV01	20.95mm±0.5
	X0815WVS−XXDS−9TV01	6.0mm±0.5
	X0815WVS−XXES−9TV01	9.0mm±0.5
	X0815WVS−XXFS−9TV01	15.75mm±0.5
	X0815WVS−XXGS−9TV01	14.25mm±0.5

Poles	Dimensions(mm)						
	A	B	C	D	E	F	G
10	3.20	13.00	4.80	7.80	12.80	10.00	12.60
20	7.20	17.00	8.80	11.80	16.80	14.00	16.60
30	11.20	21.00	12.80	15.80	20.80	18.00	20.60
40	15.20	25.00	16.80	19.80	24.80	22.00	24.60
50	19.20	29.00	20.80	23.80	28.80	26.00	28.60
60	23.20	33.00	24.80	27.80	32.80	30.00	32.60
70	27.20	37.00	28.80	31.80	36.80	34.00	36.60
80	31.20	41.00	32.80	35.80	40.80	38.00	40.60
90	35.20	45.00	36.80	39.80	44.80	42.00	44.60
100	39.20	49.00	40.80	43.80	48.80	46.00	48.60

PART NO	Material	Material(Pin)	Suitable XKB Wafer
X0815FVS−60BS−9TV01	PA9T	Phosphor Bronze	X0815FVS

AuGLAR	±5°
X.	±0.40
X.x	±0.30
X.xx	±0.20
X.xxx	±0.15
UNSPECIFIED TOLERAuCES	

XKB Connection 星创

DESIGN	阿树	VIEW:	MODEL TYPE: 0.8mm BTB Connector
CHECKED		UNIT: mm/in	PART NO.: X0815FVS−60BS−9TV01
APPROVED		SIZE: A4	DWG NO.:

XKB INDUSTRIAL PRECISION CO.,LIMITED

SCALE	PAGE	REVISION
N/A	1/1	A1