REVISIONS					
REV.	ECN NO.	LOCATION	DESCRIPTION	DATE	DESIGN
A0	N/A		INITIAL RELEASE	/	/
A1	N/A		图面升级整理图面	2025.2.14	阿树

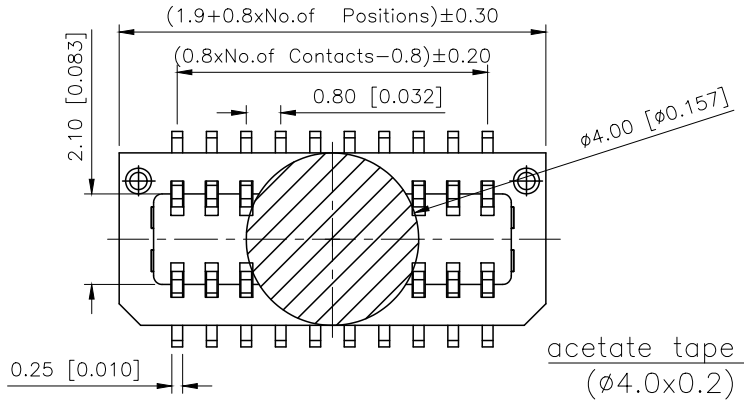

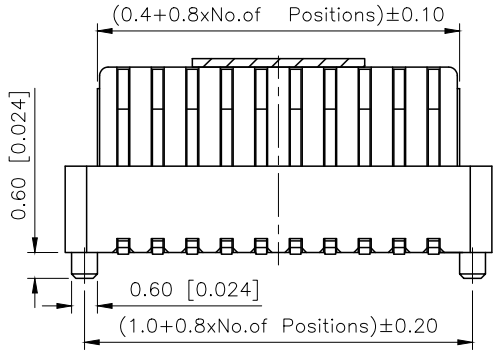

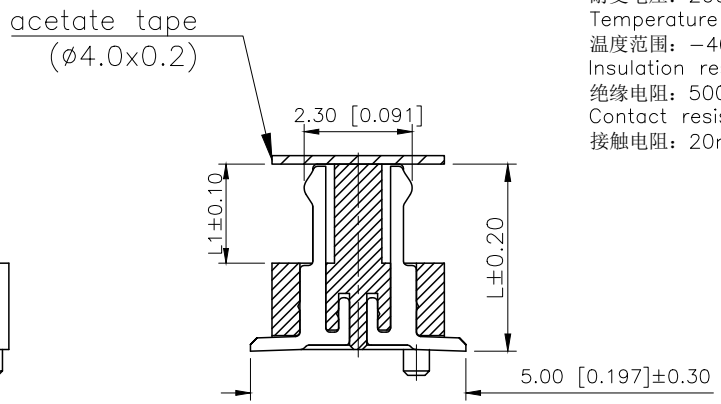

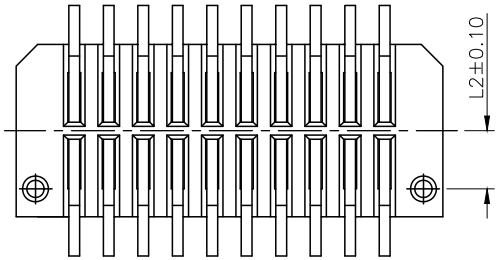

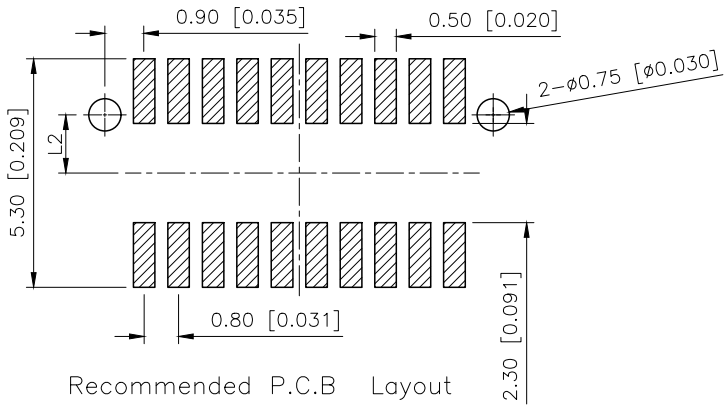

Recommended P.C.B Layout

Specifications:
规格：
Voltage rating:50V AC/DC
额定电压：50V AC/DC
Current rating:0.5A AC/DC
额定电流：0.5A AC/DC
Withstanding voltage:200V AC/minute
耐受电压：200V AC/分钟
Temperature range:−40℃−+105℃
温度范围：−40℃−+105℃
Insulation resistance:500MΩ min
绝缘电阻：500MΩ Min
Contact resistance:20mΩ Max
接触电阻：20mΩ Max

PART NO.:

X0814 W V S−2x15 B −9T V01
① ② ③ ④ ⑤ ⑥ ⑦ ⑧

①Series No
②Category:W−Wafer
③Welding Board Angle:V−Stright 180°
④Welding Way: S−SMT
⑤Row No.Pin No:2xXX−2x02~2x25P
⑥Height:A=4.0mm; B=4.5mm; C=5.0;
D=5.5; E=6.0;F=6.5; G=7.0;
⑦Material:9T−PA9T UL94V−0
⑧Plating:V01−Gold Flash ;
SN−Tin Plated

Mating Height	PLUG	L	L1	L2
A=4.0	2.80	2.80	1.80	1.35
B=4.5	3.30	3.30		
C=5.0	3.80	3.80		
D=5.5	4.30	4.30	2.30	
E=6.0	4.80	4.80		
F=6.5	5.30	5.30		
G=7.0	5.30	5.30		1.25

PART NO	Material	Material(Pin)	Suitable XKB Famale
X0814WVS-2x15B-9TV01	Nylon 9T	Phosphor Bronze	X0814F

AuGLAR	±5°
X.	±0.40
X.x	±0.30
X.xx	±0.20
X.xxx	±0.15
UNSPECIFIED TOLERAuCES	

XKB Connection 星创

DESIGN	阿树	VIEW:	MODEL TYPE: 0.8mm BTB Style Connectors
CHECKED		UNIT: mm/in	PART NO.: X0814WVS−2x15B−9TV01
APPROVED		SIZE: A4	DWG NO.:

XKB INDUSTRIAL PRECISION CO.,LIMITED

SCALE	PAGE	REVISION
N/A	1/1	A1