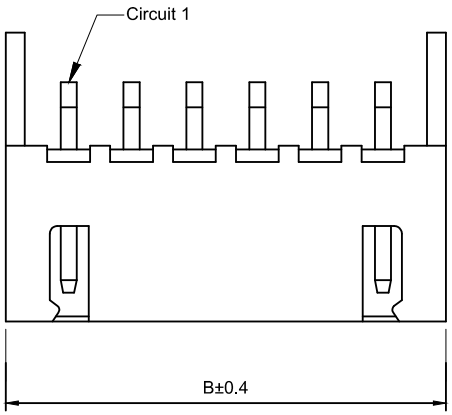

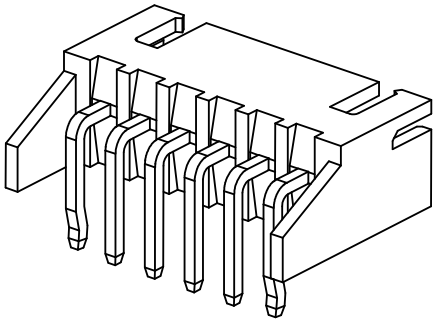

■ Specifications :

- Voltage rating: 250V AC / DC
- Current rating: 3A AC / DC
- Withstanding voltage: 1000V AC/minute
- Temperature range: -25°C~+85°C
- Insulation resistance: ≥1000MΩ
- Contact resistance: ≤10mΩ
- After environmental testing : ≤20mΩ

X8821 W R-06K- N2 SN
① ② ③ ④ ⑤ ⑥ ⑦

① Series No.
② Category : W-WAFER
③ Wedding Board Angle : R-Stright 90°
④ Row No.-Pin No.: XX-02P~20P
⑤ Plug the Pin & Special No.:K-KINK
⑥ Material : N0-PA66;46-PA46 94V-0
⑦ Plating Category: Sn-Bright Tin Plating

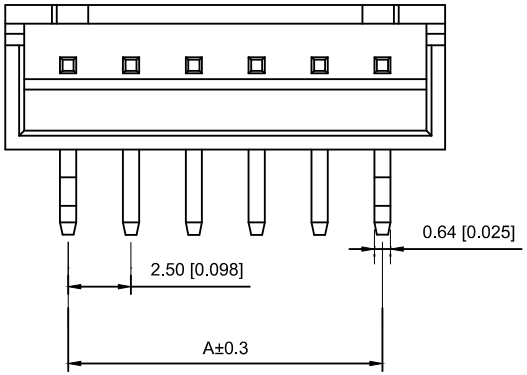

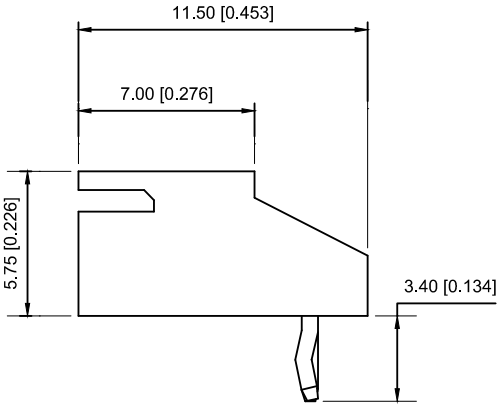

Poles	Dimensions(mm)		Poles	Dimensions(mm)	
	A	B		A	B
02	2.50	7.50	12	27.50	32.50
03	5.00	10.00	13	30.00	35.00
04	7.50	12.50	14	32.50	37.50
05	10.00	15.00	15	35.00	40.00
06	12.50	17.50	16	37.50	42.50
07	15.00	20.00	17	40.00	45.00
08	17.50	22.50	18	42.50	47.50
09	20.00	25.00	19	45.00	50.00
10	22.50	27.50	20	47.50	52.50
11	25.00	30.00			

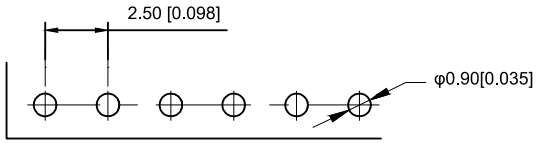

Recommended P.C.B Layout

General Tolerance±0.05

X8821WR-06K-46SN	PA46 UL 94V-0	Brass	Tin-Plated	X8821H
X8821WR-06K-N0SN	Nylon 66 UL 94V-0			
PART N0	Material	Material(pin)	Finish(pin)	Suitable XKB Housng

MARK	DESCRIPTION	DATE	REVISED	APPROVED
ΔX				
ΔX				
ΔX				

REVISIONS

UNSPECIFIED TOLERANCES	
ANGLAR	±5°
L≤4	±0.2
4<L≤16	±0.3
16<L≤63	±0.4
L>63	±0.5

DSND		DATE		SCALE: N/A
DWN		DATE		VIEW:
CHKD		DATE		UNIT: mm/in
APPD		DATE		SIZE: A4

XKB INDUSTRIAL PRECISION CO.,LIMITED

MODEL TYPE: 2.5mm Crimp Style Connectors
PART NO.: X8821WR-06K-N2SN
DWG NO.: X-X8821WR-06K-N2SN

WEIGHT	SHEET	REVISION
1.0g	1/1	A0