REV.	DESCRIPTION OF REVISIONS	APPR.	CHKD.	DRAW.	DATE
1	NEW			HUABO	2024/1/26
2					

ELECTRIC FUNCTION	DETECT SWITCH
WITHOUT CARD SLOT	CLOSED
CARD SLOT INSERTED	OPEN

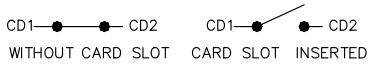

SWITCH OPERATION DIAGRAM

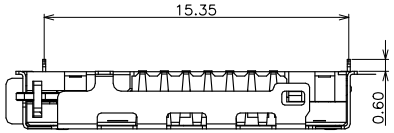

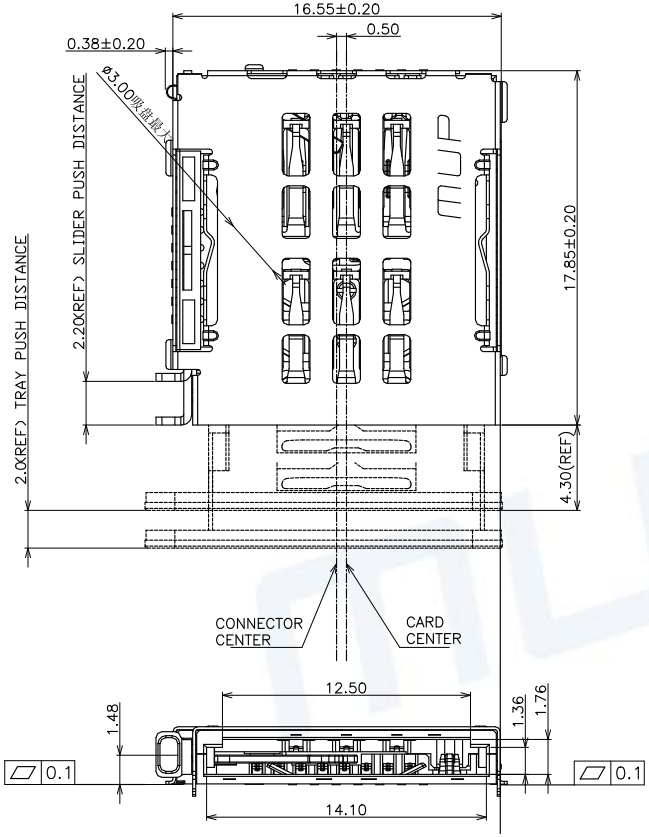

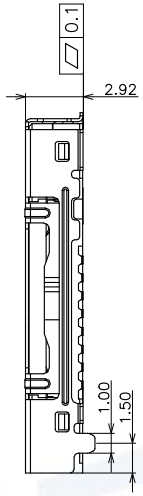

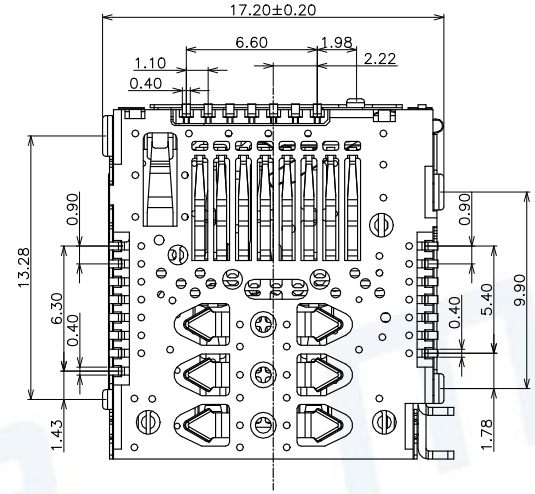

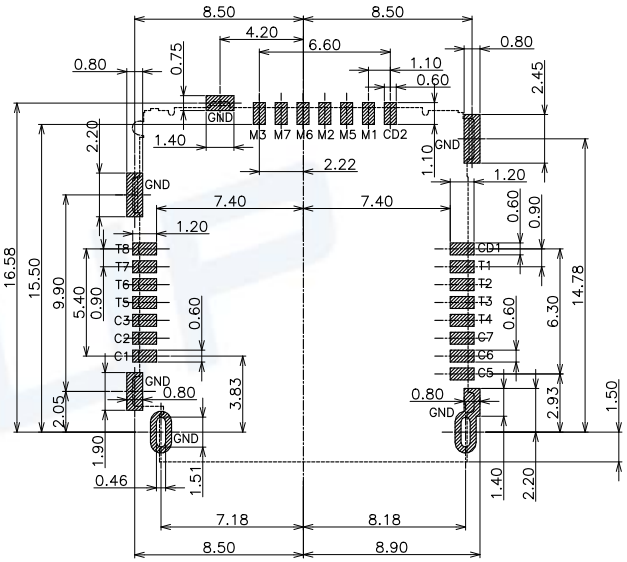

TECHNICAL CHARACTERISTICS
1.General Characteristics
Dimensions:17.85LX16.55WX2.95H mm
TRAY MATING FORCE:2~10N
TRAY UNMATING FORCE:2~10N
Durability:1,000 cycles min.
2.Electrical Characteristics
Contact resisitance:150mΩ typical,
After Test:200mΩMax
Insulation resistance: >100M/250V DC
3.Solderability
Vaporphase: 215°C, 30sec.Max
IR reflow: 260°C,5sec.Max
Manual soldering: 370°C.3sec.Max
4.Environmental Characteristics
Operating remperature: −40°C~+85°C
Operating humidity: 10%~+95%RH

PAD AREA
CONNECTOR OUTLINE

RECOMMENDED P.C.B LAYOUT
COMPONENT SIDE(TOLERANCE ±0.05)

ITEM	PART NAME	Q'TY	MATERIAL	FINISH
1	HOUSING	2	Hi−temp Thermoplastic	Black UL94V−0
2	SIM CONTACT	6+6	Copper Alloy	Contact area: 1u"Au plated
3	TF CONTACT	8	Copper Alloy	Contact area: 1u"Au plated
4	SWITCH	2	Copper Alloy	Contact area :Gold plated
5	SHELL	1	Stainless Steel	Solder area :Gold plated
6	Lever	1	Stainless Steel	
7	Cam	1	Stainless Steel	

NANO SIM CARD		
TOP Pin No.	BOTTOM Pin No.	ASSIGNMENT
M1	C1	VCC(SUPPLY VOLTAGE)
M2	C2	RST(RESET SIGNAL)
M3	C3	CLK(COLCK SIGNAL)
M5	C5	GND
M6	C6	VPP(VARIABLE SUPPLY VOLTAGE)
M7	C7	I/O(DATA INPUT/OUTPUT

TF CARD PIN ASSIGNMENT		
PIN	SD NAME	SPI NAME
1	DAT2	RSV
2	CD/DAT3	CS
3	CMD	DI
4	VDD	VDD
5	CLK	SCLK
6	VSS	VSS
7	DAT0	DO
8	DAT1	RSV

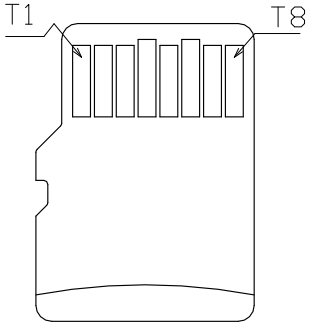

TF CARD

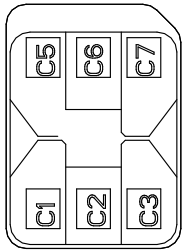

Unless otherwise specified, other tolerance are:

X	±0.35	X°	±5°
X.X	±0.25	X.X°	±4°
X.XX	±0.15	X.XX°	±3°
X.XXX	±0.10	X.XXX°	±2°

PROJ. | UNIT mm | SCALE 1:1

CUSTOMER DRAWING

RoHS PROCESS COMPLIANT

MUP INDUSTRIAL CO.,LTD.

NAME: **3 Or 2-Nano Sim &TF SD DOUBLE Connector**

MODEL NO: **MUP-M6110-01**

TYPE : **H2.95mm Normally Close With Card Tray type**

DRAWN	HUABO 2024/1/26	DWG NO.: DWG−M6110−01−01
CHECKED	Henry 2024/1/26	SHEET 1/1 / REVISION 1
APPROVAL	Simon 2024/1/26	