| REV. | ECN NO. | DESCRIPTION | DRAW | APPD. | DATE |
|---|---|---|---|---|---|
| A | --- | 新版本发行 | SHI | DMX | 2019.08.08 |
| A1 | --- | 新版本发行 | jiangpeng | DMX | 2019.08.18 |

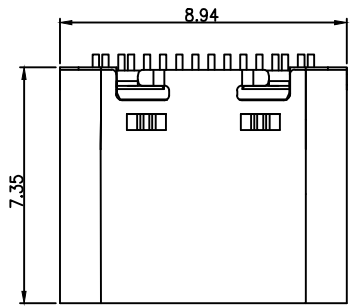


NOTES:

SPECIFICATION:

1. CURRENT RATING: 3.0A MAX
2. VOLTAGE: 100 VAC
3. TEMPERATURE RANGE: -30 °C ~ 85 °C
4. CONTACT RESISTANCE: 40 MILLIONHM MAX
5. INSULATION RESISTANCE: 100 MEGOHMS MIN.
6. LNSERTION FORCE : 5N~20N
7. UNMATING FORCE: 8N~20N
8. DURABILITY: 8,000 CYCLES

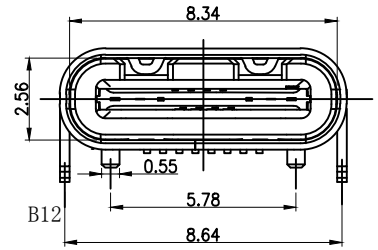


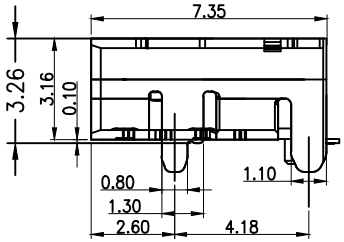


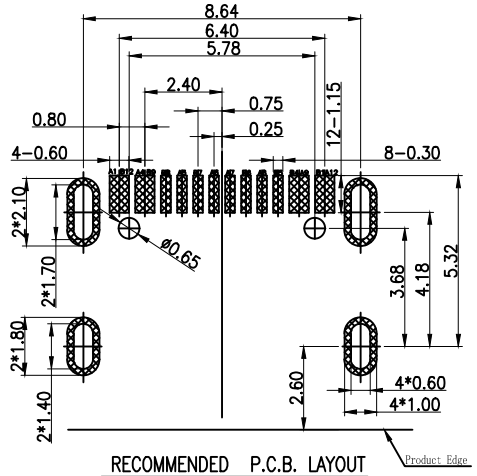


RECOMMENDED P.C.B. LAYOUT

TOLERANCE UNSPECIFIED ±0.05mm

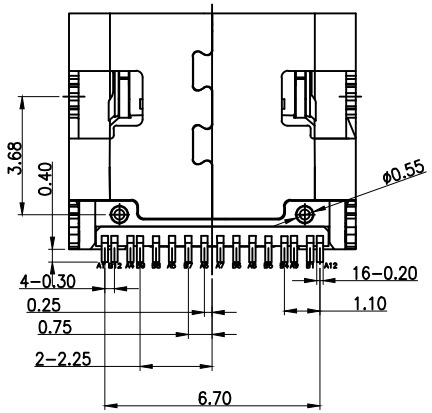


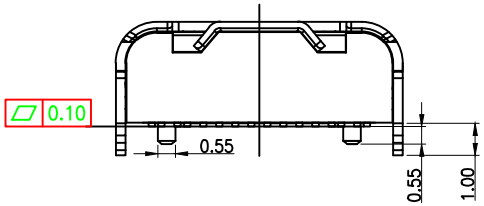


| NO. | DESCRIPTION | MATERIAL | REMARKS | QTY |
|---|---|---|---|---|
| 6 | SHELL | STAINLESS STEEL | NI Plated | 1PCS |
| 5 | SHIELDING PLATE | STAINLESS STEEL | --- | 1PCS |
| 4 | MD | HIGH TEMPERATURE PLASTIC | BLACK | 1PCS |
| 3 | CONTACT | COPPER ALLOY | Au/NI Plated | 1SET |
| 2 | CONTACT | COPPER ALLOY | Au/NI Plated | 1SET |
| 1 | HOUSING | HIGH TEMPERATURE PLASTIC | BLACK | 1PCS |

| PIN | SIGNAL NAME | PIN | SIGNAL NAME |
|---|---|---|---|
| A1 | GND | B12 | GND |
| A4 | VBUS | B9 | VBUS |
| A5 | CC1 | B8 | SBU2 |
| A6 | DP1 | B7 | DN2 |
| A7 | DN1 | B6 | DP2 |
| A8 | SBU1 | B5 | CC2 |
| A9 | VBUS | B4 | VBUS |
| A12 | GND | B1 | GND |

| TOLERANCE | | |
|---|---|---|
| X.X | ±0.30 | X.° ± 2° |
| .XX | ±0.20 | .X° ± 1° |
| .XXX | ±0.10 | .XX° ±0.5° |
| UNITS | | mm |
| MATERILA | | |
| FINISH | | |

NAME(INTENDED USE)

PART NO.

APPD:

CHED:

DRAW:

东莞市高钺达电子科技有限公司

TITLE:
USB C F TYPE单排SMT四脚插板
有柱7.35长 一次成型带钢片

DRAWG NO.
TYPE16-N1N1-MD01-Z

| SCALE | SHEET | REV. |
|---|---|---|
| 1:1 | 1/1 | A1 |