General tolerances(mm)														
0 ~ 3	>3 ~ 6	>6 ~ 10	>10 ~ 18	>18 ~ 30	>30 ~ 50	>50 ~ 80	>80 ~ 120	>120 ~ 180	>180 ~ 250	>250 ~ 315	>315 ~ 400	>400 ~ 500	>500	⌓ 0.1/10
±0.12	±0.18	±0.22	±0.26	±0.31	±0.37	±0.57	±0.80	±0.93	±1.05	±1.15	±1.60	±2.20	±2.50	∠ ±2°

REV.	DESCRIPTION	ECN NO.	NAME	DATE

UL Standard	B	C	D
Rated Voltage(V)/Current(A)	300/15	/	300/10
IEC Standard			
Overvoltage Category/Pollution Degree	Ⅲ/3	Ⅲ/2	Ⅱ/2
Rated Voltage(V)/Current(A)	/	320/20	/
Rate Impulse Voltage(KV)	/	4	/
Pitch(mm)/Poles	5.08/N=02~24P		
Operating temperature(°C)	−40°C~+105°C		
Conform to RoHS	Yes		

ITEM	NAME OF PART	MATERIAL	NOTES
2	Pin	Copper	Sn Plated
1	Housing	PA66	UL94V−0 Black

Product model	PIN	A	B	C
JCB508−ZOMB2P	2	12.16	5.08	5.08
JCB508−ZOMB3P	3	17.24	10.16	10.16
JCB508−ZOMB4P	4	22.32	15.24	15.24
JCB508−ZOMB5P	5	27.40	20.32	20.32
JCB508−ZOMB6P	6	32.48	25.40	25.40
JCB508−ZOMB7P	7	37.56	30.48	30.48
.....	....	.....	.....	.....
JCB508−ZOMB24P	24	5.08xN+2	5.08x(N−1)	5.08x(N−1)

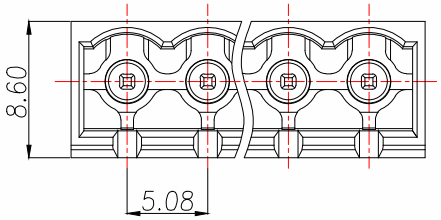

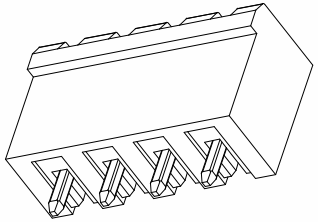

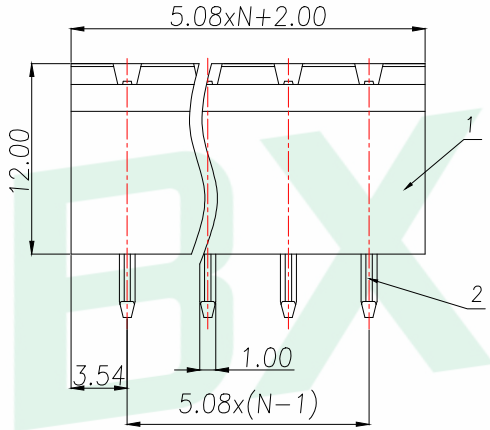

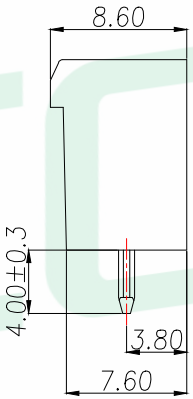

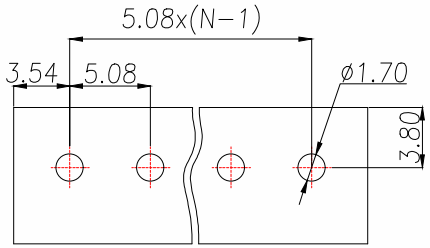

PCB LAYOUT

GENERAL TOLERANCE	DONGGUAN BAOXUN PRECISION TECHNOLOGY CO., LTD					BXCONN®
DIM. TOL.	TITLE: Socket−type terminal					
GENERAL ANGLE:	DWG. NO.: JCB508−ZOMBXP				CHECKED: MAX	
	PART NO.: JCB508−ZOMBXP				DRAWN: ELLA	
	UNIT: mm	SCALE: none	SHEET: 1 of 1	DWG. SIZE: A4	LAYER: bxconn	APPROVED: WILL