REV.	DESCRIPTION	ECN NO.	NAME	DATE

General tolerances(mm)														
0 ~ 3	>3 ~ 6	>6 ~ 10	>10 ~ 18	>18 ~ 30	>30 ~ 50	>50 ~ 80	>80 ~ 120	>120 ~ 180	>180 ~ 250	>250 ~ 315	>315 ~ 400	>400 ~ 500	>500	0.1/10
±0.12	±0.18	±0.22	±0.26	±0.31	±0.37	±0.57	±0.80	±0.93	±1.05	±1.15	±1.60	±2.20	±2.50	±2°

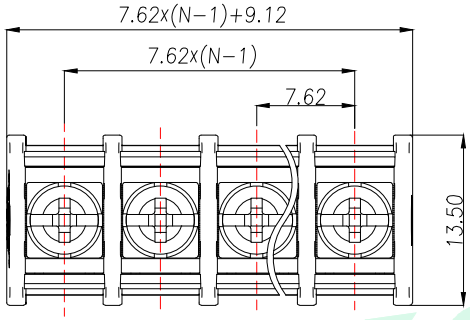

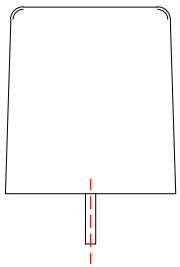

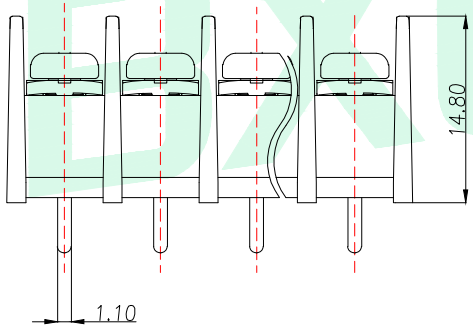

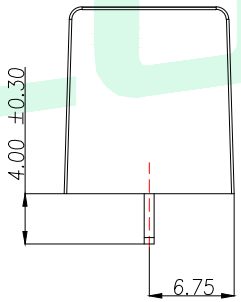

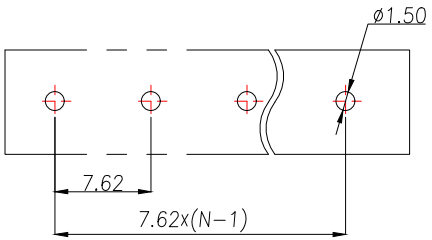

PCB LAYOUT

UL Standard	B	C	D
Rated Voltage(V)/Current(A)	300/7	/	/
Torque Tightening(N·m/Lb.in)	M3, 0.5/4.43		
Wire Range(rigid and flexible)(mm²/AWG)	22~14		
Pitch(mm)/Poles	5.08/N=02~24P		
Operating temperature(°C)	−40~+105		
Conform to RoHS	Yes		

Note:The A&Z(H) in the name means: A(H) and Z(H).

ITEM	NAME OF PART	MATERIAL	NOTES
3	Scerw	Steel	M3/Ni Plated
2	Pin Header	Copper alloy	Sn Plated
1	Housing	PA66	UL94V−0

GENERAL TOLERANCE
DIM. TOL.
GENERAL ANGLE:

DONGGUAN BAOXUN PRECISION TECHNOLOGY CO., LTD

BXCONN®

TITLE: CUSTOMER DRAWING

DWG. NO.: JCC762−Z0MBXP | CHECKED: MAX

PART NO.: JCC762−Z0MBXP | DRAWN: ELLA

UNIT:	SCALE:	SHEET:	DWG. SIZE:	LAYER:	APPROVED:
mm	none	1of 1	A4	bxconn	WILL