REV.	DESCRIPTION	ECN NO.	NAME	DATE

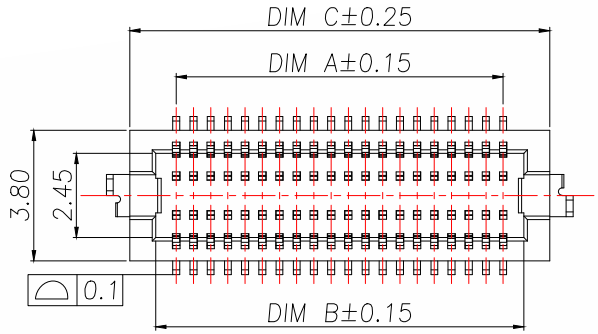

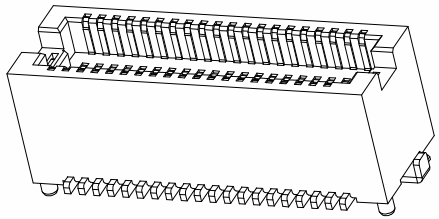

技术指标:

1.塑件表面应光洁、无毛边、无明显收缩、缺陷、裂纹等现象.
2.温度范围:-40°C~85°C.
3.额定电压:125V,AC.
4.接触电阻:≤0.02Ω.
5.绝缘电阻:≥100MΩ

序号	品名	材质
①	0.5 Pitch B型 单槽立式BTB母座胶芯	LCP UL94 V-0 颜色:米黄色
②	0.5 Pitch B型 单槽立式BTB母座端子	铜合金/表面点镀金
③	0.5 Pitch B型 单槽立式BTB母座焊片	铜合金/表面镀锡

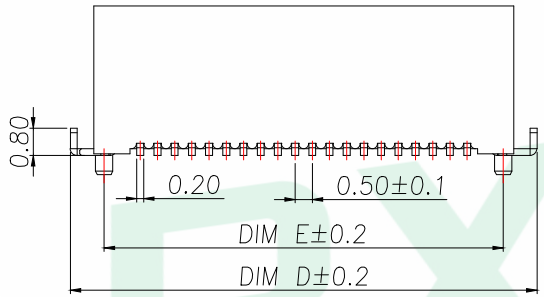

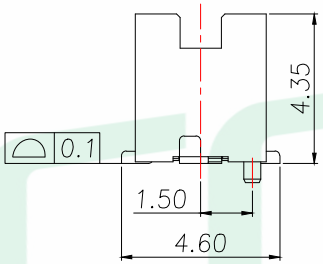

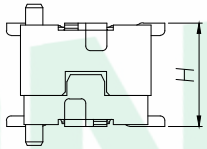

Part No	CKT	A	B	C	D	E
B0510FBA44-10P	2X5	2.00	3.20	4.70	6.06	4.10
B0510FBA44-12P	2X6	2.50	3.70	5.20	6.56	4.60
B0510FBA44-14P	2X7	3.00	4.20	5.70	7.06	5.10
B0510FBA44-16P	2X8	3.50	4.70	6.20	7.56	5.60
B0510FBA44-18P	2X9	4.00	5.20	6.70	8.06	6.10
B0510FBA44-20P	2X10	4.50	5.70	7.20	8.56	6.60
B0510FBA44-22P	2X11	5.00	6.20	7.70	9.06	7.10
B0510FBA44-24P	2X12	5.50	6.70	8.20	9.56	7.60
B0510FBA44-26P	2X13	6.00	7.20	8.70	10.06	8.10
B0510FBA44-28P	2X14	6.50	7.70	9.20	10.56	8.60
B0510FBA44-30P	2X15	7.00	8.20	9.70	11.06	9.10
B0510FBA44-32P	2X16	7.50	8.70	10.20	11.56	9.60
B0510FBA44-34P	2X17	8.00	9.20	10.70	12.06	10.10
B0510FBA44-36P	2X18	8.50	9.70	11.20	12.56	10.60
B0510FBA44-38P	2X19	9.00	10.20	11.70	13.06	11.10
B0510FBA44-40P	2X20	9.50	10.70	12.20	13.56	11.60
B0510FBA44-44P	2X22	10.50	11.70	13.20	14.56	12.60
B0510FBA44-50P	2X25	12.00	13.20	14.70	16.06	14.10
B0510FBA44-60P	2X30	14.50	15.70	17.20	18.56	16.60
B0510FBA44-70P	2X35	17.00	18.20	19.70	21.06	19.10
B0510FBA44-80P	2X40	19.50	20.70	22.20	23.56	21.60

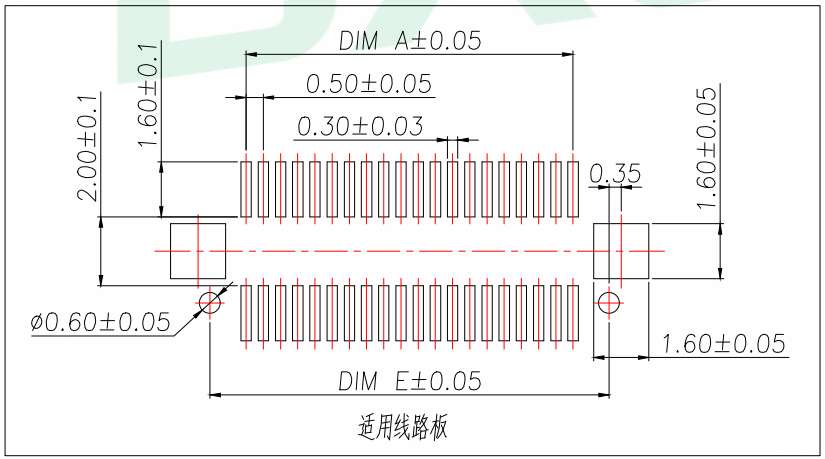

合高(H)	公座单高	母座单高
3.0	2.2	2.2
3.5	2.2	2.7
4.0	2.2	3.2
5.0	2.6	4.4

GENERAL TOLERANCE

DIM.	TOL.
x.x	±0.50
x.xx	±0.20
x.xxx	±0.10
GENERAL ANGLE:	±1.0°

DONGGUAN BAOXUN PRECISION TECHNOLOGY CO., LTD

BXCONN®

TITLE: 0.5 Pitch B型 单槽 立式 BTB 母座(单高4.4)

DWG. NO.: B0510FBA44-XP | CHECKED: MAX

PART NO.: B0510FBA44-XP | DRAWN: ELLA

UNIT:	SCALE:	SHEET:	DWG. SIZE:	LAYER:	APPROVED:
mm	none	1 of 2	A4	bxconn	WILL