REV.	DESCRIPTION	ECN NO.	NAME	DATE

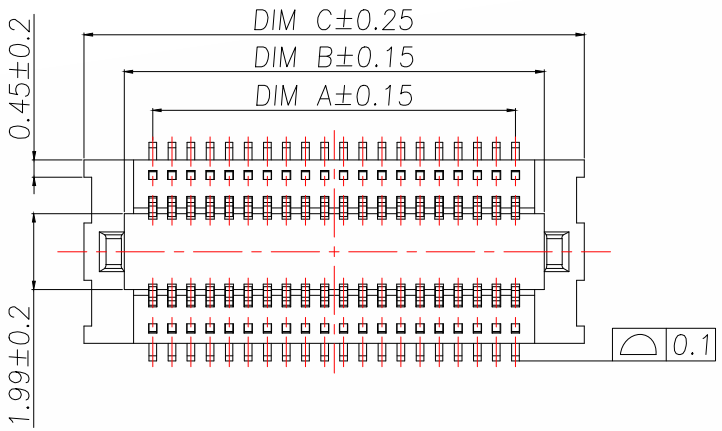

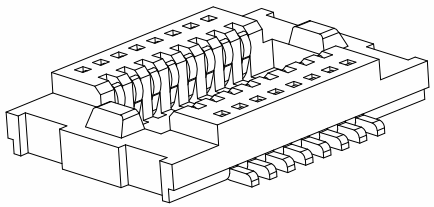

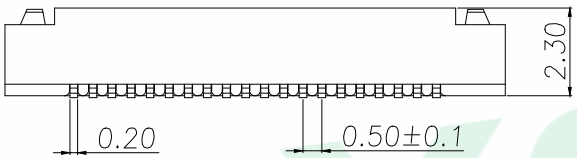

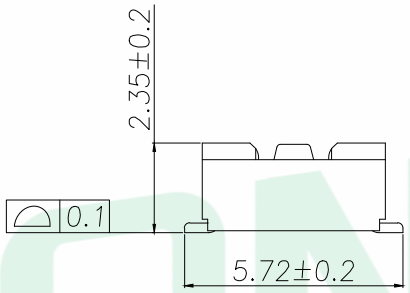

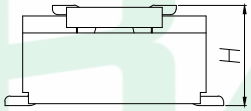

合高(H)	公座单高	母座单高
1.5	1.3	1.4
2.0	1.3	1.9
2.5	1.3	2.4

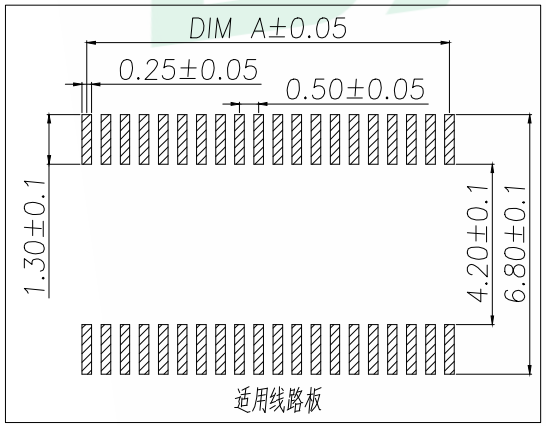

技术指标:

1.塑件表面应光洁、无毛边、无明显收缩、缺陷、裂纹等现象.

2.温度范围:−40°C~85°C.

3.额定电压:50V,AC.

4.接触电阻:≤0.02Ω.

5.绝缘电阻:≥100MΩ

序号	品名	材质
①	0.5 Pitch C型 单槽立式BTB母座胶芯	LCP UL94 V−0 颜色:米黄色
②	0.5 Pitch C型 单槽立式BTB母座端子	铜合金/表面点镀金

Part No	CKT	A	B	C
B0500FCA24−10P	2X5	2.00	3.40	5.50
B0500FCA24−12P	2X6	2.50	3.90	6.00
B0500FCA24−14P	2X7	3.00	4.40	6.50
B0500FCA24−16P	2X8	3.50	4.90	7.00
B0500FCA24−18P	2X9	4.00	5.40	7.50
B0500FCA24−20P	2X10	4.50	5.90	8.00
B0500FCA24−22P	2X11	5.00	6.40	8.50
B0500FCA24−24P	2X12	5.50	6.90	9.00
B0500FCA24−26P	2X13	6.00	7.40	9.50
B0500FCA24−28P	2X14	6.50	7.90	10.00
B0500FCA24−30P	2X15	7.00	8.40	10.50
B0500FCA24−32P	2X16	7.50	8.90	11.00
B0500FCA24−34P	2X17	8.00	9.40	11.50
B0500FCA24−36P	2X18	8.50	9.90	12.00
B0500FCA24−38P	2X19	9.00	10.40	12.50
B0500FCA24−40P	2X20	9.50	10.90	13.00
.....	...	...	...	...
B0500FCA24−100P	2X50	24.50	25.90	28.00

GENERAL TOLERANCE

DIM.	TOL.
x.x	±0.50
x.xx	±0.20
x.xxx	±0.10
GENERAL ANGLE:	±1.0°

DONGGUAN BAOXUN PRECISION TECHNOLOGY CO., LTD

BXCONN®

TITLE: 0.5 Pitch C型 单槽 立式 BTB 母座(单高2.4)

DWG. NO.: B0500FCA24−XP

CHECKED: MAX

PART NO.: B0500FCA24−XP

DRAWN: ELLA

UNIT:	SCALE:	SHEET:	DWG. SIZE:	LAYER:	APPROVED:
mm	none	1 of 2	A4	bxconn	WILL