| Product NO. | DOSIN-806-0073 | | | |
|---|---|---|---|---|
| REV | DESCRIPTION | DWN | DATE | APPROVEN |
| A | First issue | JIM | 2012/11/02 | John kine |
| | | | | |

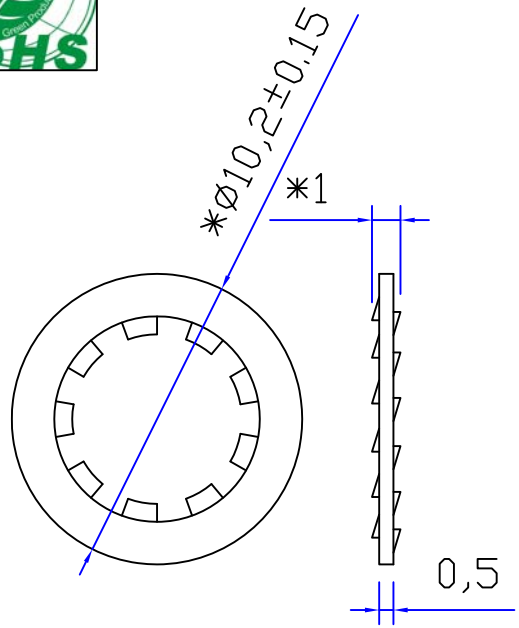


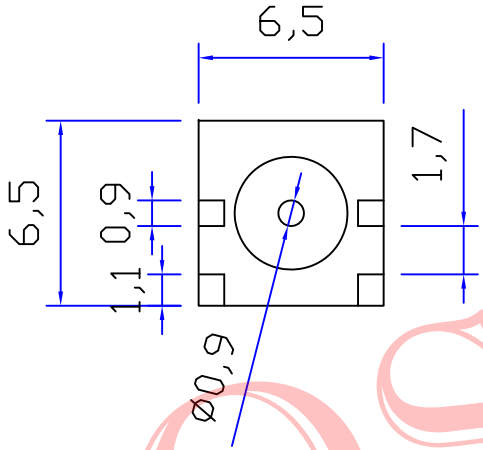


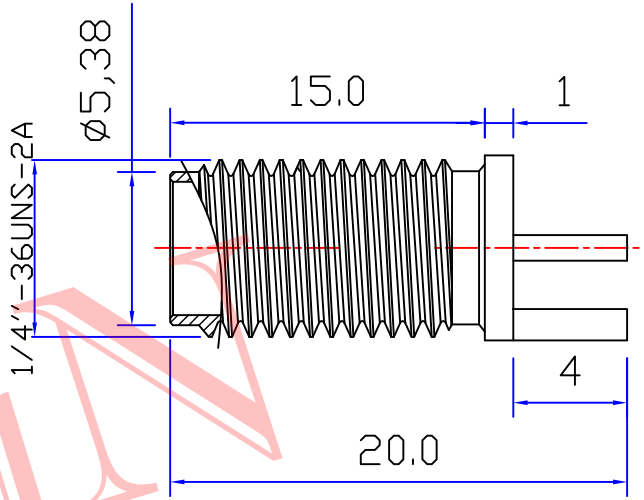


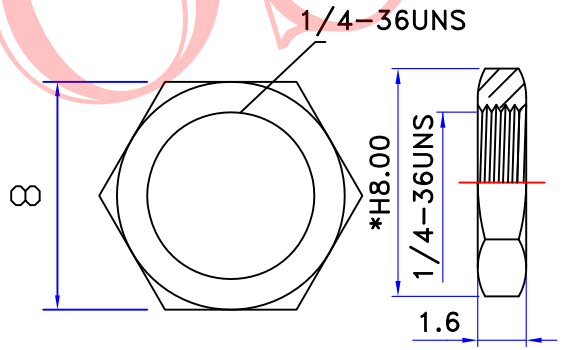


## Specifications

Impedance:50 Ohms
Frequency Range:DC~3G
VSWR:1.3MAX
Working Voltage:500V rms @ sea level
Insulation Resistance:5000 Ohms min
Temperature Range:-55℃ TO +155℃
Relative Temperature:≤95%(40° C±2° C)
Drawings products are in line with ROHS standards

| Number | Description | Material | Finish |
|---|---|---|---|
| 1 | Body | Brass | Gold 3 μ inches Minimum |
| 2 | Centre Contact | Beryllium Copper | Gold 50 μ inches Minimum |
| 3 | Insulation | PTFE | None |
| 4 | Washer | Brass | Gold |
| 5 | Nut | | |

NOTE:

| | | | |
|---|---|---|---|
| DRAWN Zelin. Zhang | 2012/11/10 | Tolerance | 0-6 ±0.05<br>6-30 ±0.10<br>30-120 ±0.15<br>Angular ±2° |
| CHECKED | | View | |
| | | UNIT | MM |
| APPROVALS John King | 12/04.2012 | SCALE | 1:1 |


DOSIN —RF CONNECTOR
Dosin Industrial(H.K)Co.Ltd
东莞市德索五金电子制品有限公司
Dosin Hardware Electronics Co.,Ltd
E-mail:dosin2005@163.com
dosin2005@dosin-china.com
Web:http://www.dosinconn.com
TEL:(0086)769-81153906
FAX:(0086)769-81875836


| | | |
|---|---|---|
| Name: SMA CONNECTOR DNN | | |
| SIZE A | Product NO. DOSIN-806-0073 | REV A |
| DateTime 2012/11/02 | CAD FILE D/company drawings/BD | SHEET: 1 OF 1 |

DOSIN