REV.	DESCRIPTION OF REVISIONS	APPR.	CHEC.	DRAW.	DATE
1	New			huabo	2024/11/06

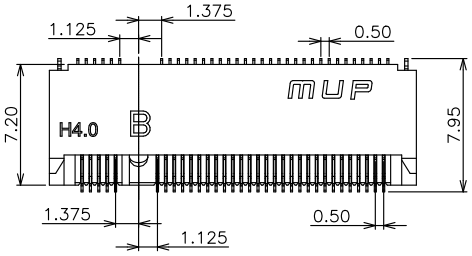

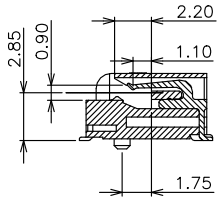

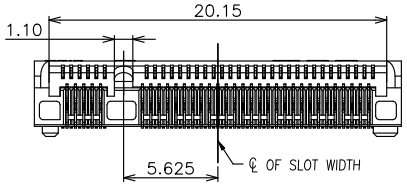

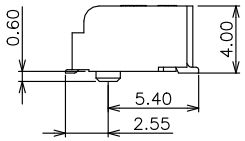

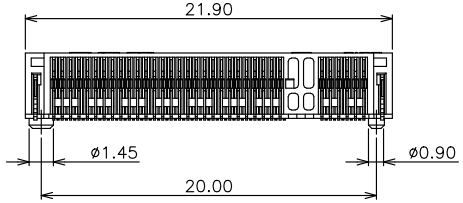

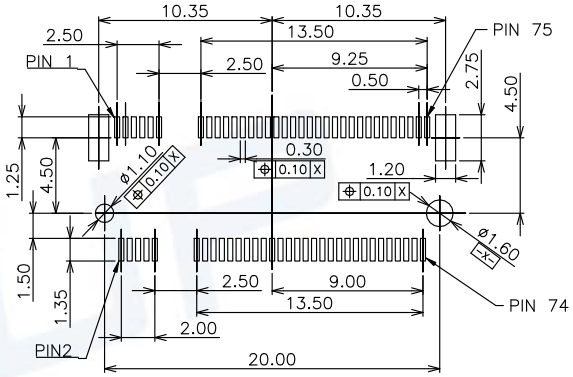

RECOMMENDED P.C.B LAYOUT
COMPONENT SIDE(TOLERANCE ±0.05)

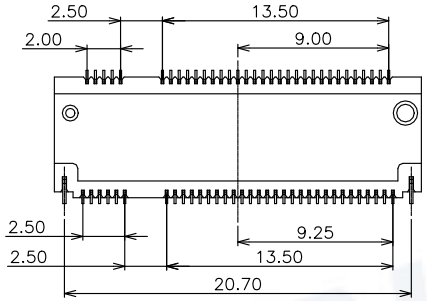

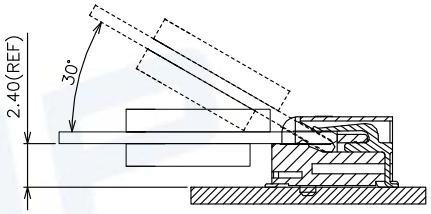

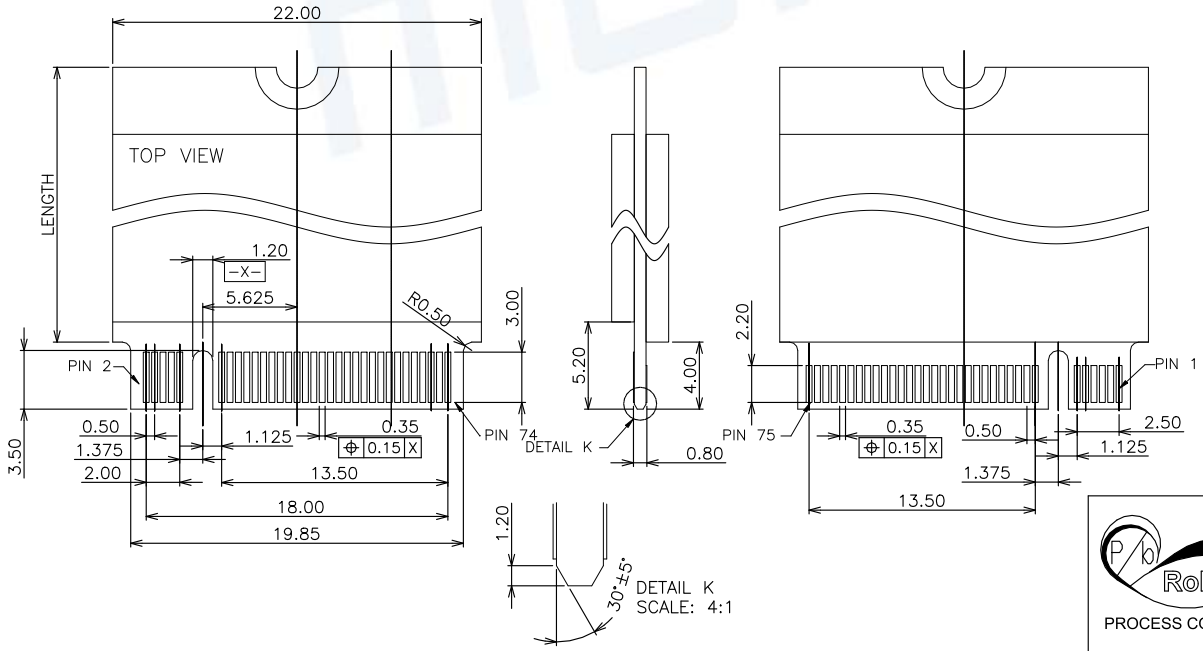

NOTES:
1. MATERIAL :
1.1 HOUSING: THERMOPLASTIC, HIGH TEMPERATURE, UL94 V-0, COLOR: BLACK.
1.2 CONTACT: COPPER ALLOY.
1.3 FITTING NAIL: COPPER ALLOY.
2. FINISH :
2.1 CONTACT
GOLD PLATING ON THE CONTACT AREA.
GOLD FLASH PLATING ON THE SOLDERING AREA.
50u". NICKEL UNDERPLATING OVERALL.
2.2 FITTING NAIL
50u" . MATTE-TIN PLATING ON THE SOLDERING AREA.
50u" . NICKEL UNDERPLATING OVERALL.

Pb RoHS
PROCESS COMPLIANT

Unless otherwise specified, other tolerance are:

X	±0.40	X°	±5°
X.X	±0.30	X.X°	±4°
X.XX	±0.20	X.XX°	±3°
X.XXX	±0.10	X.XXX°	±2°

PROJ. | UNIT mm | SCALE 1:1

CUSTOMER DRAWING

MUP® MUP INDUSTRIAL CO.,LTD.

NAME: **M.2 NGFF Connector**

MODEL NO: **MUP-M2006-01**

TYPE : **H4.0 PH0.5mm&67Pin-B KEY**

DRAWN	huabo 2024/11/06	DWG NO.:	DWG-M2006-01-01
CHECKED	huabo 2024/11/06	SHEET 1/1	REVISION 1
APPROVAL	wang 2024/11/06		