36V, 8.5MHz, RRIO, Zero-Drift Precision Operational Amplifiers

Features

- Wide Supply Range:
  Single-Supply: 4.5V ~ 36V
  Dual-Supply: ±2.25V ~ ±18V
- Low offset Voltage: 50μV (Max.)
- Low Input Bias Current: 5pA
- Zero Drift: 0.005μV/ºC
- Low Quiescent Current: 580μA
- Gain Bandwidth Product: 8.5MHz
- Slew Rate: 10 V/μs
- Rail-to-Rail Input and Output (RRIO)
- Unity Gain Stable
- No Phase Reversal
- Extended Temperature Ranges
  From -40°C to +125°C
- Small Packaging
  COS182 available in SOT23-5/SOP-8
  COS2182 available in SOP-8/MSOP-8
  COS4182 available in SOP14/TSSOP14

Applications

- Sensor Conditioning
- Temperature Measurements
- Transducers
- Test Equipment
- Medical Instrumentation
- Battery Management Systems

General Description

The COS182 (single), COS2182 (dual) and COS4182 (quad) are low power, precision operational amplifiers operated on a single +4.5V to +36V supply or dual ±2.25V to ±18V supplies. COSx182 family use chopper stabilized technique to provide very low offset voltage and near zero drift over temperature.

COSx182 family is unity gain stable and has a gain bandwidth product of 8.5MHz (typical). Despite their low quiescent current, the COSx182 family provides excellent overall performance and versatility. They have both rail-to-rail input and output range. The output voltage swing extends to within 20mV of each rail, providing the maximum output dynamic range with excellent overdrive recovery. Very low temperature offset drift and very low input bias current make the devices an ideal choice for low offset, low power consumption and high impedance applications.

Rev3.0

Copyright@2018 Cosine Nanoelectronics Inc. All rights reserved.

The information provided here is believed to be accurate and reliable. Cosine Nanoelectronics assumes no reliability for inaccuracies and omissions. Specifications described and contained here are subjected to change without notice on the purpose of improving the design and performance. All of this information described herein should not be implied or granted for any third party.

1. Pin Configuration and Functions

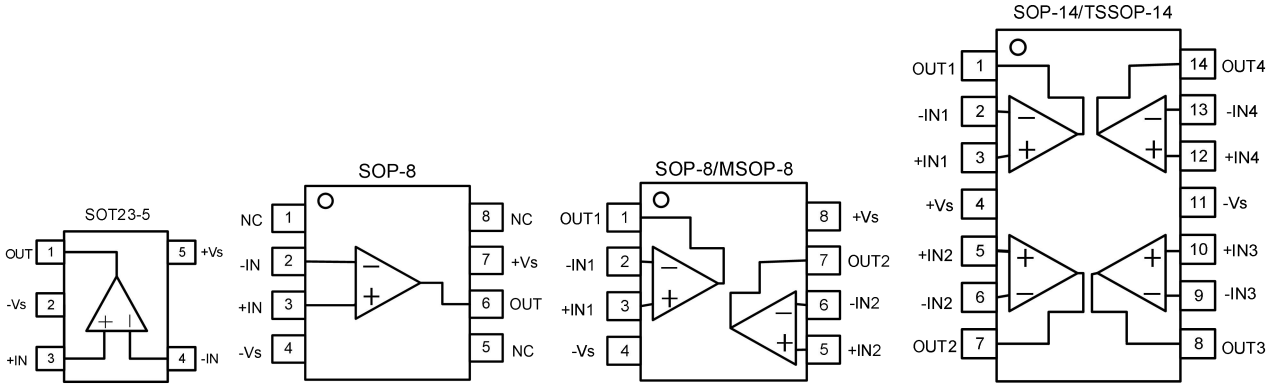

COS182 COS182 COS2182 COS4182

Pin Functions

Name	Description	Note
+Vs	Positive power supply	A bypass capacitor of 0.1μF as close to the part as possible should be placed between power supply pins or between supply pins and ground.
-Vs	Negative power supply or ground	If it is not connected to ground, bypass it with a capacitor of 0.1μF as close to the part as possible.
-IN	Negative input	Inverting input of the amplifier. Voltage range of this pin can go from -Vs -0.3V to +Vs + 0.3V.
+IN	Positive input	Non-inverting input of the amplifier. This pin has the same voltage range as –IN.
OUT	Output	The output voltage range extends to within millivolts of each supply rail.
NC	No connection	

2. Package and Ordering Information

Channel	Model	Order Number	Package	Package Option	Marking Information
1	COS182	COS182U/TR	SOT23-5	Tape and Reel, 3000	COS182
		COS182UA/TR	SOT23-5	Tape and Reel, 3000	COS182
		COS182U/SR	SOP-8	Tape and Reel, 4000	COS182
		COS182UA/SR	SOP-8	Tape and Reel, 4000	COS182
2	COS2182	COS2182U	SOP-8	Tape and Reel, 4000	COS2182
		COS2182UA	SOP-8	Tape and Reel, 4000	COS2182
		COS2182U/MR	MSOP-8	Tape and Reel, 4000	COS2182
		COS2182UA/MR	MSOP-8	Tape and Reel, 4000	COS2182

4	COS4182	COS4182U	SOP-14	Tape and Reel, 2500	COS4182
		COS4182UA	SOP-14	Tape and Reel, 2500	COS4182
		COS4182U/TR	TSSOP-14	Tape and Reel, 2500	COS4182
		COS4182UA/TR	TSSOP-14	Tape and Reel, 2500	COS4182

3. Product Specification

3.1 Absolute Maximum Ratings (1)

Parameter	Rating	Units
Power Supply: +Vs to -Vs	40	V
Input Voltage	-Vs -0.5V to +Vs + 0.5V	V
Input Current (2)	±10	mA
Storage Temperature Range	-65 to 150	°C
Junction Temperature	150	°C
Operating Temperature Range	-55 to 150	°C
ESD Susceptibility, HBM	2000	V

(1) Stresses exceeding the absolute maximum ratings may damage the device. The device may not function or be operable above the recommended operating conditions and stressing the parts to these levels is not recommended. In addition, extended exposure to stresses above the recommended operating conditions may affect device reliability. The absolute maximum ratings are stress ratings only.

(2) Input terminals are diode-clamped to the power-supply rails. Input signals that can swing more than 0.5V beyond the supply rails should be current-limited to 10mA or less.

3.2 Thermal Data

Parameter	Rating	Unit
Package Thermal Resistance, $R_{\theta JA}$ (Juntion-to-ambient)	190 (SOT23-5) 206 (MSOP8) 155 (SOP8) 105 (TSSOP14) 82 (SOP14)	°C/W

3.3 Recommended Operating Conditions

Parameter	Rating	Unit
DC Supply Voltage	4.5 (±2.25) ~ 36 (±18)	V
Input Common-mode Voltage Range	-Vs ~ +Vs	V
Operating Ambient Temperature	-40 ~ +85	°C

3.4 Electrical Characteristics

($+V_S$=4.5V to 36V, $-V_S$=0, V_{CM}=V_S/2, T_A=+25°C, R_L=10kΩ to V_S/2, unless otherwise noted)

Parameter	Symbol	Conditions	Min	Typ	Max	Unit
Input Characteristics						
Input Offset Voltage	V_{OS}	COSx182U		±10	±50	μV
		COSx182UA		±25	±125	μV
Input Offset Voltage Drift	$\Delta V_{OS}/\Delta T$	-40 to 125°C		±0.005	±0.05	μV/°C
Input Bias Current	I_B			±5		pA
Input Offset Current	I_{OS}			±3		pA
Common-Mode Voltage Range	V_{CM}		V_{-S} -0.1		V_{+S} +0.1	V
Common-Mode Rejection Ratio	CMRR		100	140		dB
Open-Loop Voltage Gain	A_{OL}			140		dB
Output Characteristics						
Output Voltage Swing from Rail		R_L=100kΩ		20		mV
		R_L=10kΩ		200		mV
Short-Circuit Current	I_{SR}	Sourcing		18		mA
	I_{SK}	Sinking		-25		mA
Power Supply						
Operating Voltage Range			4.5		36	V
Quiescent Current / Amplifier	I_Q	V_S = 36V		580		μA
Power Supply Rejection Ratio	PSRR		120	140		dB
Dynamic Performance						
Gain Bandwidth Product	GBWP	G=+1		8.5		MHz
Slew Rate	SR	G = +1 , 2V Output Step		10		V/μs
Noise Performance						
Voltage Noise Density	e_n	f=1kHz		10		nV/ √Hz

4.0 Application Notes

Driving Capacitive Loads

Driving large capacitive loads can cause stability problems for voltage feedback op amps. As the load capacitance increases, the feedback loop's phase margin decreases, and the closed loop bandwidth is reduced. This produces gain peaking in the frequency response, with overshoot and ringing in the step response. A unity gain buffer (G = +1) is the most sensitive to capacitive loads, but all gains show the same general behavior.

When driving large capacitive loads with these op amps (e.g., > 100 pF when G = +1), a small series resistor at the output (R_{ISO} in Figure 1) improves the feedback loop's phase margin (stability) by making the output load resistive at higher frequencies. It does not, however, improve the bandwidth.

To select R_{ISO}, check the frequency response peaking (or step response overshoot) on the bench. If the response is reasonable, you do not need R_{ISO}. Otherwise, start R_{ISO} at 1 kΩ and modify its value until the response is reasonable.

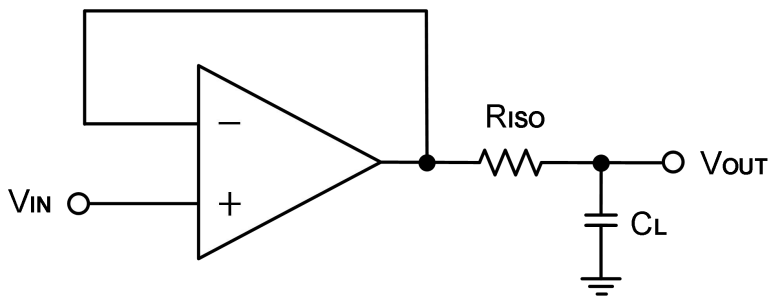

Figure 1. Indirectly Driving Heavy Capacitive Load

An improvement circuit is shown in Figure 2. It provides DC accuracy as well as AC stability. R_F provides the DC accuracy by connecting the inverting signal with the output, C_F and R_{ISO} serve to counteract the loss of phase margin by feeding the high frequency component of the output signal back to the amplifier's inverting input, thereby preserving phase margin in the overall feedback loop.

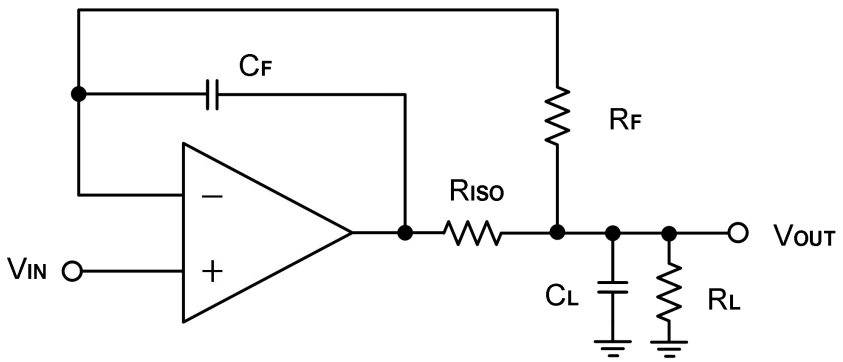

Figure 2. Indirectly Driving Heavy Capacitive Load with DC Accuracy

For the inverting configuration, there are two others ways to increase the phase margin: (a) by increasing the amplifier's gain or (b) by placing a capacitor in parallel with the feedback resistor to counteract the parasitic capacitance associated with inverting node, as shown in Figure 3.

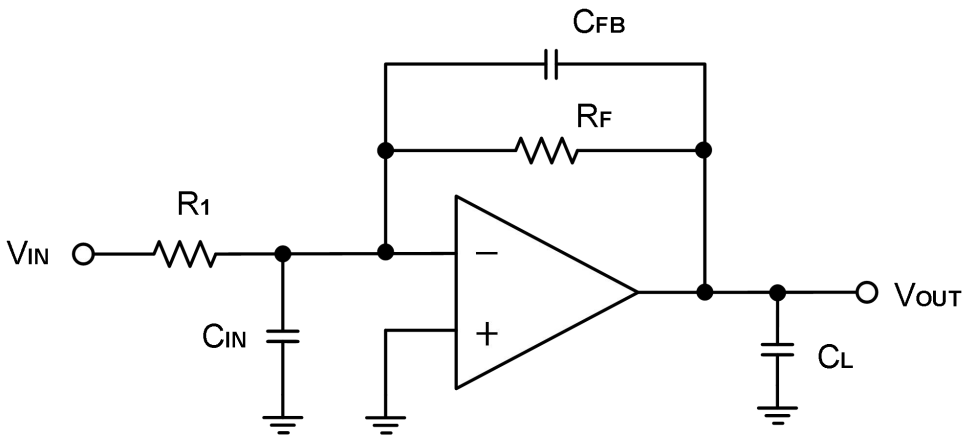

Figure 3. Adding a Feedback Capacitor in the Inverting Configuration

Power-Supply Bypassing and Layout

The COSx182 operates from a single +4.5V to +36V supply or dual ±2.25V to ±18V supplies. For single-supply operation, bypass the power supply +Vs with a 0.1μF ceramic capacitor which should be placed close to the +Vs pin. For dual-supply operation, both the +Vs and the -Vs supplies should be bypassed to ground with separate 0.1μF ceramic capacitors. 2.2μF tantalum capacitor can be added for better performance.

The length of the current path is directly proportional to the magnitude of parasitic inductances and thus the high frequency impedance of the path. High speed currents in an inductive ground return create an unwanted voltage noise. Broad ground plane areas will reduce the parasitic inductance. Thus a ground plane layer is important for high speed circuit design.

Typical Application Circuits

Differential Amplifier

The circuit shown in Figure 4 performs the differential function. If the resistors ratios are equal (R_4 / R_3 = R_2 / R_1), then $V_{OUT} = (V_{IP} – V_{IN}) \times R_2 / R_1 + V_{REF}$.

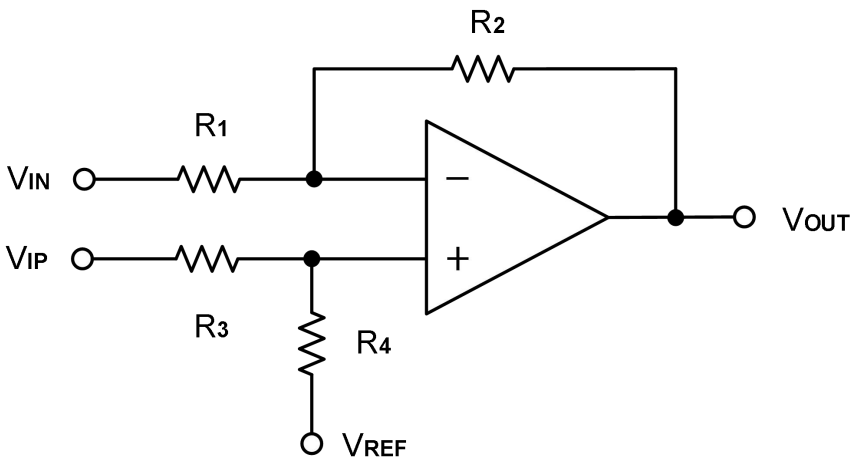

Figure 4. Differential Amplifier

Low Pass Active Filter

When receiving low-level signals, limiting the bandwidth of the incoming signals into the system is often required. The simplest way to establish this limited bandwidth is to place an RC filter at the noninverting terminal of the amplifier. If even more attenuation is needed, a multiple pole filter is required. The Sallen-Key filter can be used for this task, as Figure 5. For best results, the amplifier should have a bandwidth that is 8 to 10 times the filter frequency bandwidth. Failure to follow this guideline can result in reduction of phase margin. The large values of feedback resistors can couple with parasitic capacitance and cause undesired effects such as ringing or oscillation in high-speed amplifiers. Keep resistors value as low as possible and consistent with output loading consideration.

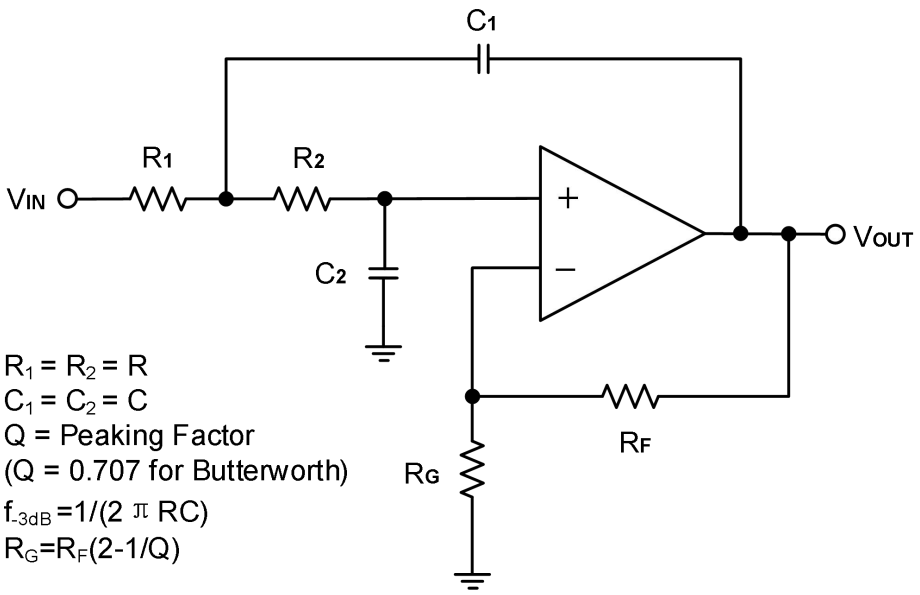

Figure 5. Two-Pole Low-Pass Sallen-Key Active Filter

5. Package Information

5.1 SOT23-5 (Package Outline Dimensions)

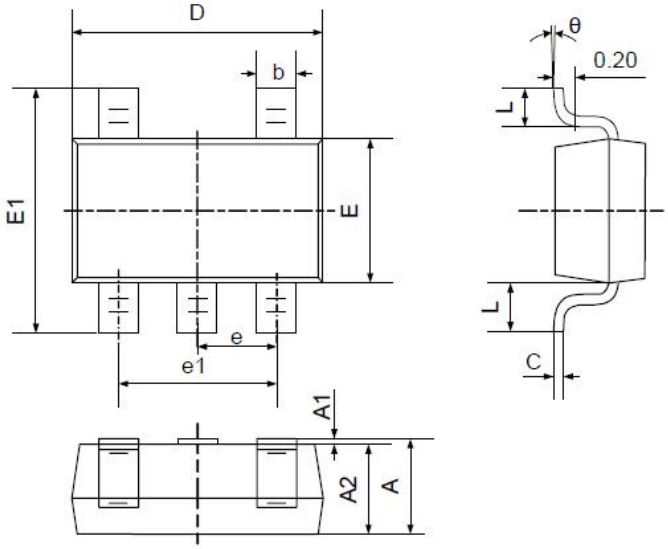

Symbol	Dimensions In Millimeters		Dimensions In Inches	
	Min	Max	Min	Max
A	1.050	1.250	0.041	0.049
A1	0.000	0.100	0.000	0.004
A2	1.050	1.150	0.041	0.045
b	0.300	0.400	0.012	0.016
c	0.100	0.200	0.004	0.008
D	2.820	3.020	0.111	0.119
E	1.500	1.700	0.059	0.067
E1	2.650	2.950	0.104	0.116
e	0.950TYP		0.037TYP	
e1	1.800	2.000	0.071	0.079
L	0.700REF		0.028REF	
L1	0.300	0.600	0.012	0.024
θ	0°	8°	0°	8°

5.2 SOP8 (Package Outline Dimensions)

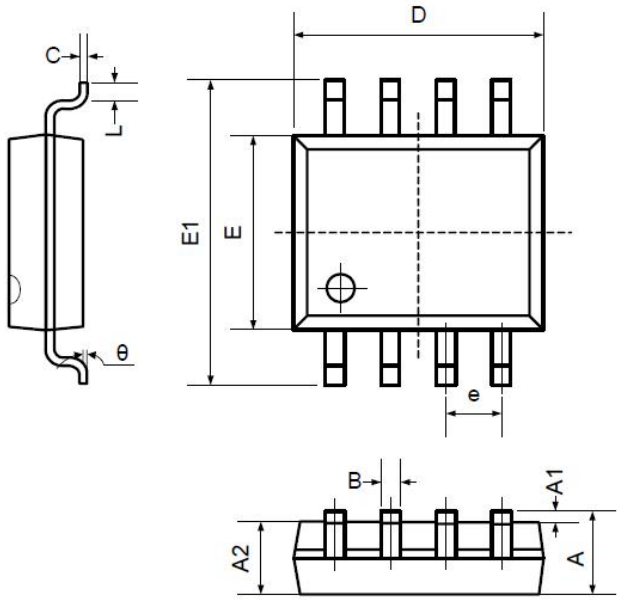

Symbol	Dimensions In Millimeters		Dimensions In Inches	
	Min	Max	Min	Max
A	1.350	1.750	0.053	0.069
A1	0.100	0.250	0.004	0.010
A2	1.350	1.550	0.053	0.061
B	0.330	0.510	0.013	0.020
C	0.190	0.250	0.007	0.010
D	4.780	5.000	0.188	0.197
E	3.800	4.000	0.150	0.157
E1	5.800	6.300	0.228	0.248
e	1.270TYP		0.050TYP	
L	0.400	1.270	0.016	0.050
θ	0°	8°	0°	8°

5.3 MSOP8 (Package Outline Dimensions)

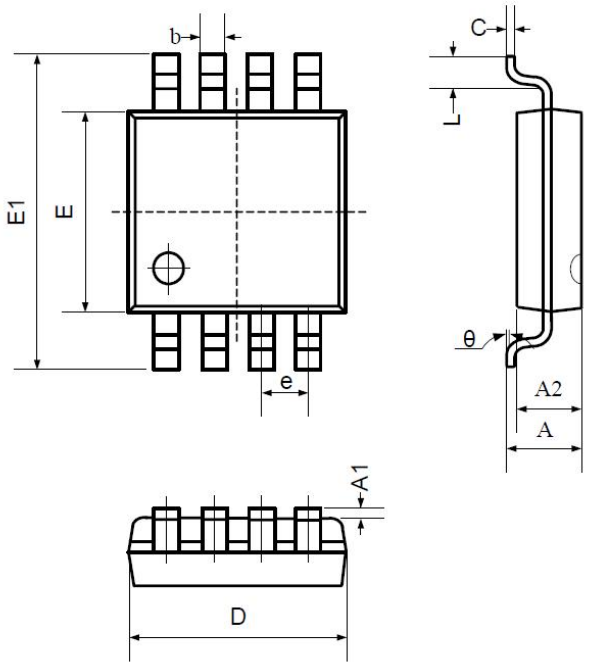

Symbol	Dimensions In Millimeters		Dimensions In Inches	
	Min	Max	Min	Max
A	0.800	1.200	0.031	0.047
A1	0.000	0.200	0.000	0.008
A2	0.760	0.970	0.030	0.038
b	0.30 TYP		0.012 TYP	
c	0.15 TYP		0.006 TYP	
D	2.900	3.100	0.114	0.122
e	0.65 TYP		0.026 TYP	
E	2.900	3.100	0.114	0.122
E1	4.700	5.100	0.185	0.201
L	0.410	0.650	0.016	0.026
θ	0°	6°	0°	6°

5.4 SOP14 (Package Outline Dimensions)

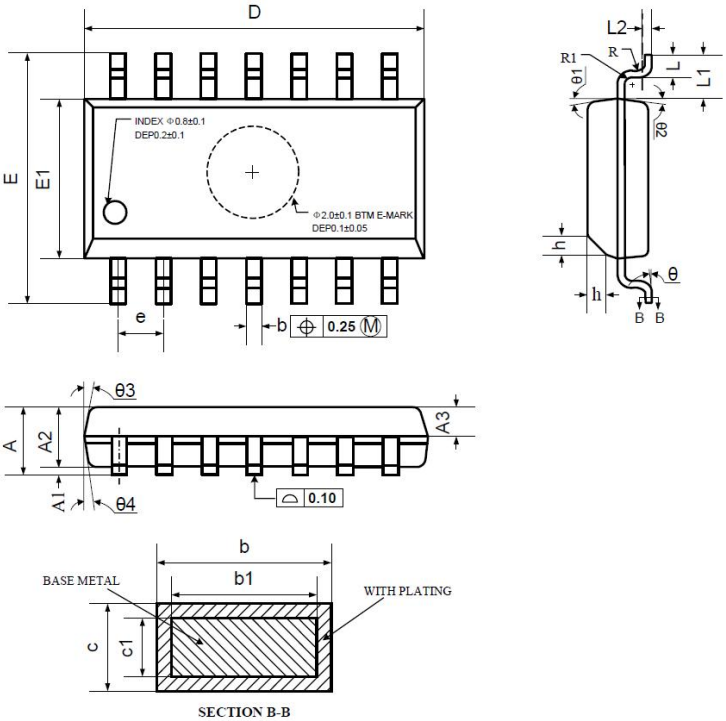

Symbol	Dimensions In Millimeters		
	MIN	NOM	MAX
A	1.35	1.60	1.75
A1	0.10	0.15	0.25
A2	1.25	1.45	1.65
A3	0.55	0.65	0.75
b	0.36		0.49
b1	0.35	0.40	0.45
c	0.16		0.25
c1	0.15	0.20	0.25
D	8.53	8.63	8.73
E	5.80	6.00	6.20
E1	3.80	3.90	4.00
e	1.27 BSC		
L	0.45	0.60	0.80
L1	1.04 REF		
L2	0.25 BSC		
R	0.07		
R1	0.07		
h	0.30	0.40	0.50
θ	0°		8°
θ1	6°	8°	10°
θ2	6°	8°	10°
θ3	5°	7°	9°
θ4	5°	7°	9°

5.5 TSSOP14 (Package Outline Dimensions)

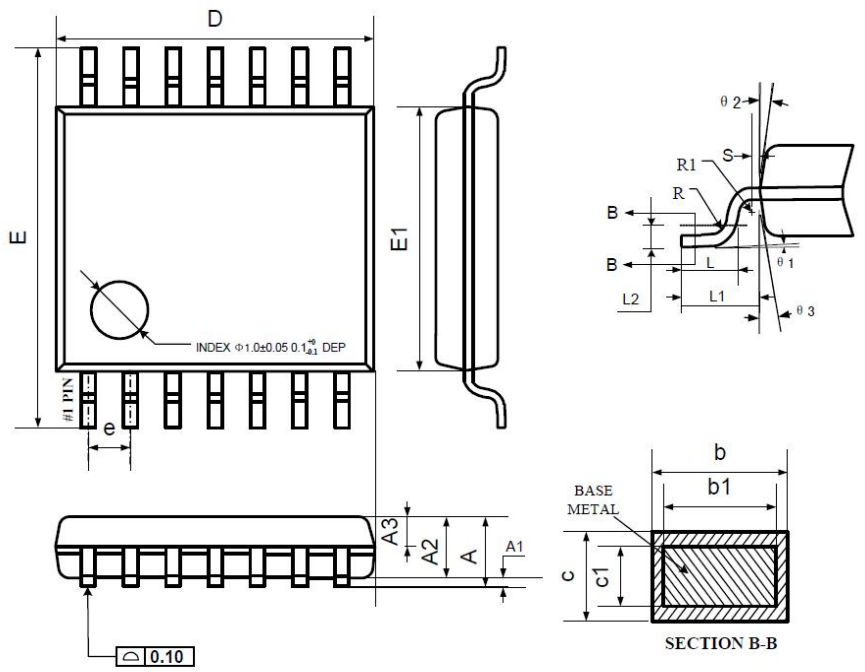

Symbol	Dimensions In Millimeters		
	MIN	NOM	MAX
A	—	—	1.20
A1	0.05	—	0.15
A2	0.90	1.00	1.05
A3	0.34	0.44	0.54
b	0.20	—	0.28
b1	0.20	0.22	0.24
c	0.10	—	0.19
c1	0.10	0.13	0.15
D	4.86	4.96	5.06
E	6.20	6.40	6.60
E1	4.30	4.40	4.50
e	0.65 BSC		
L	0.45	0.60	0.75
L1	1.00 REF		
L2	0.25 BSC		
R	0.09	—	—
R1	0.09	—	—
S	0.20	—	—
θ1	0°	—	8°
θ2	10°	12°	14°
θ3	10°	12°	14°

6. Related Parts

Part Number	Description
COS6042	24kHz, 0.5μA, Nano-Power Op Amps, 1.4V to 5.5V Supply
COS8042	160MHz, 5.5mA, High Speed Op Amps, 3V to 12V Supply
COS2172	10MHz, 1.2mA, RRIO Op Amps, 4.5 to 40V Supply
COS2333	350kHz, 18μA, Precision Op Amps, 1.8 to 5.5V Supply, Zero Drift, Vos<10μV
COS8552	1.5MHz, 55μA, Precision Op Amps, 1.8 to 5.5V Supply, Zero Drift, Vos<10μV
COS2388	9MHz, 570μA, Precision Op Amps, 1.8 to 5.5V Supply, Zero Drift, Vos<10μV
COS2227	10MHz, 1.3mA, Precision Op Amps, 4.5 to 36V Supply, Vos<50μV
COS2182	8.5MHz, 580μA, RRIO Precision Op Amps, 4.5 to 36V Supply, Vos<50μV
COS620	1.5MHz, 1.3mA, Instrumentation Amps, 4.5 to 36V Supply, Vos<50μV
COSINA333	150kHz, 65μA, Instrumentation Amps, 1.8 to 5.5V Supply, Vos<25μV