SMD1206P005~200 Series

Positive Thermal Coefficent Diodes

Features：

- ✧ RoHS Compliant ＆ Halogen Free
- ✧ faster tripping, 1206 Dimension, Surface mountable, Solid state
- ✧ Operation Current: 0.05A~2.00A
- ✧ Maximum Voltage: 6V~60Vdc
- ✧ Operating Temperature：-40℃TO 85℃
- ✧ UL qulified

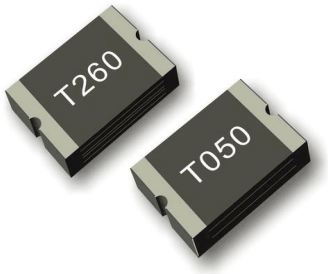

Product Dimensions

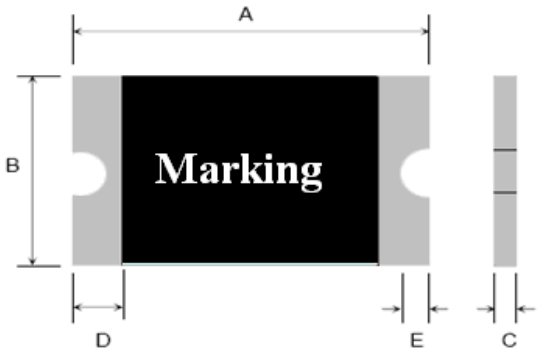

Fig.1

Terminal pad materials :Tin-Plated Nickle-copper

Terminal pad solderability : Meets EIA specification RS 186-9E and ANSI/J-STD-002 Category 3.

Unit ： mm

Model No.	A		B		C		D	E
	Min	Max	Min	Max	Min	Max	Min	Min
SMD1206P005TF	3.00	3.50	1.50	1.80	0.60	1.10	0.15	0.10
SMD1206P010TF	3.00	3.50	1.50	1.80	0.60	1.10	0.15	0.10
SMD1206P010TF-33	3.00	3.50	1.50	1.80	0.50	1.10	0.15	0.10
SMD1206P012TF	3.00	3.50	1.50	1.80	0.60	1.10	0.15	0.10
SMD1206P016TF	3.00	3.50	1.50	1.80	0.40	0.90	0.15	0.10
SMD1206P020TF	3.00	3.50	1.50	1.80	0.40	0.90	0.15	0.10
SMD1206P025TF	3.00	3.50	1.50	1.80	0.40	0.90	0.15	0.10
SMD1206P030TF	3.00	3.50	1.50	1.80	0.40	0.90	0.15	0.10
SMD1206P035TF	3.00	3.50	1.50	1.80	0.40	0.90	0.15	0.10
SMD1206P050TF	3.00	3.50	1.50	1.80	0.35	0.85	0.15	0.10
SMD1206P050TF-13.2	3.00	3.50	1.50	1.80	0.35	0.85	0.15	0.10

Model No.	A		B		C		D	E
	Min	Max	Min	Max	Min	Max	Min	Min
SMD1206P050TF-16	3.00	3.50	1.50	1.80	0.35	0.85	0.15	0.10
SMD1206P050TF-24	3.00	3.50	1.50	1.80	0.35	0.85	0.15	0.10
SMD1206P075TF	3.00	3.50	1.50	1.80	0.35	0.85	0.15	0.10
SMD1206P075TF-13.2	3.00	3.50	1.50	1.80	0.35	0.85	0.15	0.10
SMD1206P075TF-16	3.00	3.50	1.50	1.80	0.60	1.30	0.15	0.10
SMD1206P100TF	3.00	3.50	1.50	1.80	0.40	0.80	0.15	0.10
SMD1206P100TF-13.2	3.00	3.50	1.50	1.80	0.40	1.30	0.15	0.10
SMD1206P100TF-16	3.00	3.50	1.50	1.80	0.40	1.30	0.15	0.10
SMD1206P110TF	3.00	3.50	1.50	1.80	0.40	0.80	0.15	0.10
SMD1206P150TF	3.00	3.50	1.50	1.80	0.60	1.50	0.15	0.10
SMD1206P200TF	3.00	3.50	1.50	1.80	0.70	1.70	0.15	0.10

Thermal Derating Chart-IH（A）

Part number	Maximum ambient operating temperatures（℃）								
	-40	-20	0	25	40	50	60	70	85
SMD1206P005TF	0.09	0.08	0.06	0.05	0.04	0.036	0.033	0.029	0.02
SMD1206P010TF	0.18	0.16	0.12	0.1	0.08	0.072	0.066	0.058	0.04
SMD1206P010-33TF	0.18	0.16	0.12	0.1	0.08	0.072	0.066	0.058	0.04
SMD1206P012TF	0.216	0.192	0.144	0.12	0.096	0.086	0.079	0.070	0.048
SMD1206P016TF	0.288	0.256	0.192	0.160	0.128	0.115	0.106	0.093	0.064
SMD1206P020TF	0.31	0.26	0.22	0.20	0.18	0.16	0.15	0.13	0.07
SMD1206P025TF	0.37	0.33	0.29	0.25	0.22	0.20	0.17	0.15	0.12
SMD1206P030TF	0.444	0.396	0.348	0.30	0.264	0.24	0.204	0.18	0.144
SMD1206P035TF	0.50	0.45	0.40	0.35	0.30	0.27	0.24	0.21	0.15
SMD1206P050TF	0.71	0.64	0.57	0.50	0.42	0.39	0.35	0.31	0.25
SMD1206P050TF-13.2	0.71	0.64	0.57	0.50	0.42	0.39	0.35	0.31	0.25
SMD1206P050TF-16	0.71	0.64	0.57	0.50	0.42	0.39	0.35	0.31	0.25
SMD1206P050TF-24	0.639	0.576	0.513	0.50	0.378	0.351	0.315	0.279	0.225
SMD1206P075TF	1.14	1.01	0.88	0.75	0.65	0.59	0.54	0.49	0.41
SMD1206P100TF	1.45	1.31	1.15	1.00	0.84	0.77	0.69	0.61	0.48
SMD1206P100TF-13.2	1.305	1.179	1.035	1.00	0.756	0.693	0.621	0.549	0.432
SMD1206P100TF-16	1.305	1.179	1.035	1.00	0.756	0.693	0.621	0.549	0.432
SMD1206P110TF	1.595	1.441	1.265	1.10	0.924	0.847	0.759	0.671	0.528
SMD1206P150TF	2.18	1.94	1.72	1.50	1.28	1.17	1.06	0.96	0.77
SMD1206P200TF	2.60	2.44	2.35	2.00	1.78	1.67	1.50	1.45	1.10

Electrical Characteristic

Model No.	Vmax (Vdc)	Imax (A)	Ihold @25℃ (A)	Itrip @25℃ (A)	Time to trip		R25	
					Current (A)	Time (Sec)	Ri_{min} (Ω)	$R1_{max}$ (Ω)
SMD1206P005TF	60.0	100	0.05	0.15	0.25	1.50	3.600	50.000
SMD1206P010TF	60.0	100	0.10	0.25	0.5	1.00	1.600	15.000
SMD1206P010TF-33	33.0	100	0.10	0.25	0.5	1.00	1.600	15.000
SMD1206P012TF	60	100	0.12	0.29	1.00	0.20	1.350	10.00
SMD1206P016TF	30	100	0.16	0.37	1.00	0.30	1.200	4.50
SMD1206P020TF	24.0	100	0.20	0.46	8.0	0.08	0.350	3.500
SMD1206P025TF	16.0	100	0.25	0.50	8.0	0.08	0.350	2.700
SMD1206P030TF	16.0	100	0.30	0.65	8.0	0.10	0.250	2.00
SMD1206P035TF	16.0	100	0.35	0.75	8.0	0.10	0.250	1.300
SMD1206P050TF	6.0	100	0.50	1.00	8.0	0.10	0.150	0.700
SMD1206P050TF-13.2	13.2	100	0.50	1.00	8.0	0.10	0.150	0.700
SMD1206P050TF-16	16	100	0.50	1.00	8.0	0.10	0.150	0.750
SMD1206P050TF-24	24	100	0.50	1.00	8.0	0.10	0.150	0.750
SMD1206P075TF	6.0	100	0.75	1.50	8.0	0.20	0.090	0.500
SMD1206P075TF-13.2	13.2	100	0.75	1.50	8.0	0.20	0.090	0.500
SMD1206P075TF-16	16	100	0.75	1.50	8.0	0.20	0.090	0.500
SMD1206P100TF	6.0	100	1.00	1.80	8.0	0.30	0.055	0.270
SMD1206P100TF-13.2	13.2	100	1.00	1.80	8.0	0.30	0.055	0.270
SMD1206P100TF-16	16	100	1.00	1.80	8.0	0.30	0.055	0.330
SMD1206P110TF	8.0	100	1.10	1.80	8.0	0.30	0.050	0.230
SMD1206P150TF	6.0	100	1.50	3.00	8.0	1.00	0.040	0.130
SMD1206P200TF	6.0	100	2.00	3.50	8.0	1.0	0.018	0.080

Part Numbering System

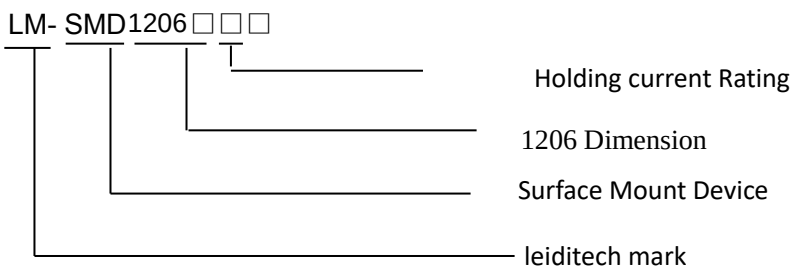

Test Procedures And Requirements

Test	Test Conditions	Accept/Reject Criteria
Resistance	In still air @ 25℃	$R_{min} \leq R \leq R_{max}$
Time to Trip	Specified current，V_{max}，25℃	T≤maximum Time to Trip
Hold Current	30min，at I_H	No trip
Trip Cycle Life	Vmax，Imax，100cycles	No arcing or burning
Trip Endurance	Vmax，1 hours	No arcing or burning

Physical Characteristics and Environmental Specifications

Physical Characteristics

Terminal materials :	Tin-Plated Nickle-copper	
Soldering zone	Meets EIA specification RS 186-9E and ANSI/J-STD-002 Category 3.	
Environmental Specifications		
Test	Conditions	Resistance Change
Passive aging	85℃,1000hours	±10%
Humidity aging	85℃/85%RH.1000 hours	±5%
Thermal shock	MIL-STD-202,Method 107G +85℃/-40℃,20times	-30% typical resistance change
Solvent Resistance	MIL-STD-202,Method 215	no change
Vibration	ML-STD-883C,Test Condition A	No chage

Electrical Specifications:

I_{hold} = Hold Current. Maximum current device will not trip in 25 ℃ still air.

I_{trip} = Trip Current. Minimum current at which the device will always trip in 25 ℃ still air.

V_{max} = Maximum operating voltage device can withstand without damage at rated current (Imax).

I_{max} = Maximum fault current device can withstand without damage at rated voltage (Vmax).

Pd=Maximum power dissipation when device is in the tripped state in 25 ℃ still air environment at rated voltage.

$Ri_{min/max}$ = Minimum/Maximum device resistance prior to tripping at 25 ℃.

$R1_{max}$ = Maximum device resistance is measured one hour post reflow.

Recommended pad layout (mm)

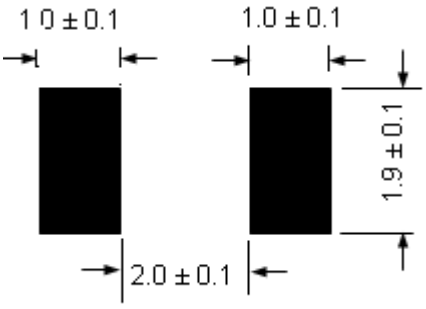

Solder reflow conditions

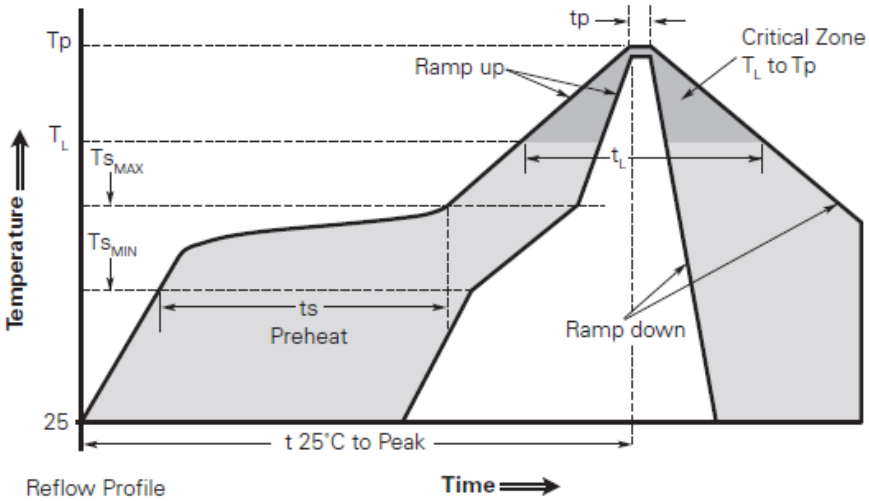

Profile Feature	Pb-Free Assembly
Average ramp up rate (Ts_{MAX} to Tp)	3°C/second max.
Preheat	
• Temperature min. (Ts_{MIN})	150°C
• Temperature max. (Ts_{MAX})	200°C
• Time (ts_{MIN} to ts_{MAX})	60-120 seconds
Time maintained above:	
• Temperature (T_L)	217°C
• Time (t_L)	60-150 seconds
Peak/Classification temperature (Tp)	260°C
Time within 5°C of actual peak temperature	
Time (tp)	30 seconds max.
Ramp down rate	3°C/second max.
Time 25°C to peak temperature	8 minutes max.

Note: All temperatures refer to topside of the package, measured on the package body surface.

- Recommended reflow methods: IR, vapor phase oven, hot air oven, N2 environment for lead-free.
- Devices are not designed to be wave soldered to the bottom side of the board.
- Recommended maximum paste thickness is 0.25mm (0.010inch).
- Devices can be cleaned using standard industry methods and solvents.
- Soldering temprature profile meets RoHsleadfree process.

Notes: If reflow temperatures exceed the recommended profile, devices may not meet the performance requirements

Tape Specification And Reel Dimensions

Covering Specifications EIA 481-1(Unit:mm)	
W	8.15 +0.15/-0.3
P_0	4.0 ± 0.10
P_1	4.0± 0.10
P_2	2.0 ± 0.05
A_0	1.95 ± 0.10
B_0	3.65 ± 0.10
D_0	1.55± 0.05
F	3.50± 0.05
E_1	1.75 ± 0.10
T	0.20± 0.10
Leadermin.	390
Trailer min.	160

Reel Dimensions	
A	178±1.0
N	59±1
W_1	8.5+1.0/-0.2
W_2	12.0±1

EIA Tape Component Dimentions

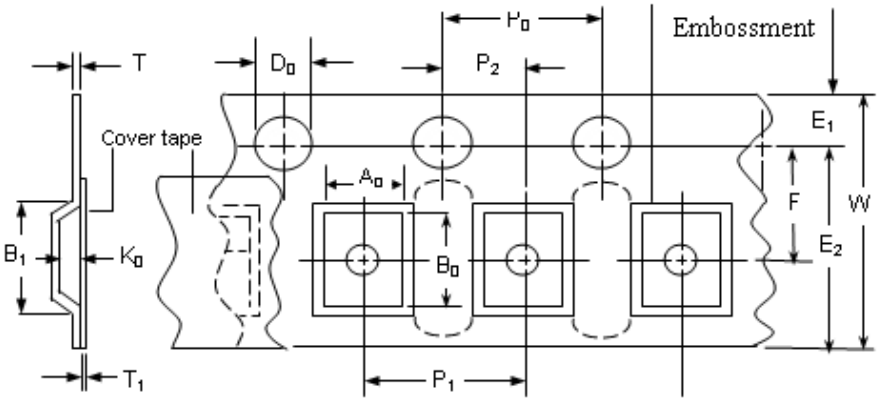

EIA Reel Dimentions

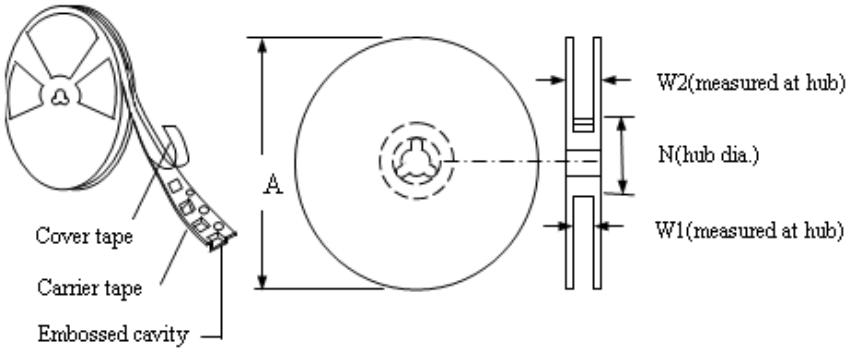

Storage

The maximum ambient temperature shall not exceed 38℃. Storage temperatures higher than 38℃ could result in the deformation of packaging materials. The maximum relative humidity recommended for storage is 60%. High humidity with high temperature can accelerate the oxidation of the solder plating on the termination and reduce the solderability of the components. Sealed plastic bags with desiccant shall be used to reduce the oxidation of the termination and shall only be opened prior to use. The products shall not be stored in areas where harmful gases containing sulfur or chlorine are present

WARNING

- Use PPTC beyond the maximum ratings or improper use may result in device damage and possible electrical arcing and flame.
- PPTC are intended for protection against occasional over current or over temperature fault conditions and should not be used when repeated fault conditions or prolonged trip events are anticipated.
- Device performance can be impacted negatively if devices are handled in a manner inconsistent with recommended electronic, thermal, and mechanical procedures for electronic components.
- Use PPTC with a large inductance in circuit will generate a circuit voltage (L di/dt) above the rated voltage of the PPTC.
- Avoid impact PPTC device its thermal expansion like placed under pressure or installed in limited space.
- Contamination of the PPTC material with certain silicon based oils or some aggressive solvents can adversely impact the performance of the devices.PPTC SMD can be cleaned by standard methods.
- Requests that customers comply with our recommended solder pad layouts and recommended reflow profile. Improper board layouts or reflow profilecould negatively impact solderability performance of our devices.

NOTICE
Leiditech reserves the right to make modifications,enhancements,improvements,corrections or other changes without further notice to any product herein. Leiditech does not assume any liability arising out of the application or use of any product described herein.

Shanghai Leiditech Electronic Co.,Ltd
Email: sale1@leiditech.com
Tel : +86- 021 50828806
Fax : +86- 021 50477059