ULC0321S

1-Line Bi-directional TVS Diode

Features

- 51 Watts Peak Pulse Power per Line (tp=8/20 μ s)
- Protects One Bidirectional I/O Line
- Low Clamping Voltage
- RoHS Compliant
- Complies with following standards:

  IEC61000-4-2 (ESD) ±25kV (air), ±20kV (contact)

  IEC61000-4-4 (EFT) 40A (5/50ηs)

  IEC61000-4-5 (LIGHTING) 4.0A (8/20 μ s)

Dimensions DFN0603

Applications

- Cellular Handsets & Accessories
- Notebooks & Handhelds
- Portable Instrumentation
- LVDS Interfaces
- Peripherals
- Digital cameras
- CCD Camera Lines
- Automobile Applications

Pin Configuration

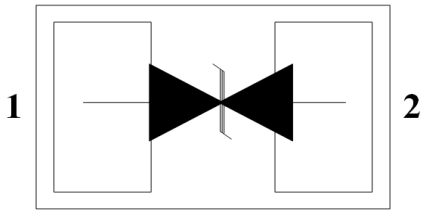

Typic Application Schematic

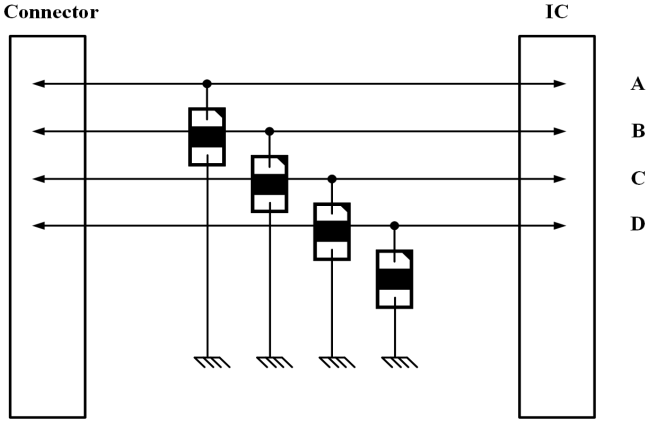

Mechanical Characteristics

- Package:DFN0603
- Molding Compound Flammability Rating : UL 94V-O
- Weight 0.3 Millgrams (Approximate)
- Reel Size : 7 inch
- Lead Finish : Lead Free
- Quantity Per Reel : 10,000pcs
- Device Marking : 3V

Absolute Maximum Ratings(Tamb=25°C unless otherwise specified)

Parameter	Symbol	Value	Unit
Peak Pulse Power (8/20μs)	Ppp	51	W
ESD per IEC 61000−4−2 (Air)	V_{ESD}	± 25	Kv
ESD per IEC 61000−4−2 (Contact)		± 20	
Operating Temperature Range	T_J	-40 to +125	℃
Storage Temperature Range	T_{STJ}	-55 to +150	℃

Electrical Characteristics(TA=25°C unless otherwise specified)

Parameter	Symbol	Test Condition	Min	Typ	Max	Unit
Reverse Working Voltage	V_{RWM}				3.3	V
Breakdown Voltage	V_{BR}	I_T = 1mA	6.3		8.3	V
Reverse Leakage Current	I_R	V_{RWM} = 3.3V			0.1	μA
Clamping Voltage	V_C	I_{PP} = 5A (8 x 20 μs pulse)			15	V
Transmission Line Pulse	TLP	I_{tlp} = 1A		5.5		V
Transmission Line Pulse	TLP	I_{tlp} = 8A		15.5		V
Transmission Line Pulse	TLP	I_{tlp} = 16A		24.5		V
Junction Capacitance	C_J	V_R = 0V, f = 1MHz		0.2		pF

TYPIC CHARACTERISTICS

Figure 1. 8 x 20 μs Waveform

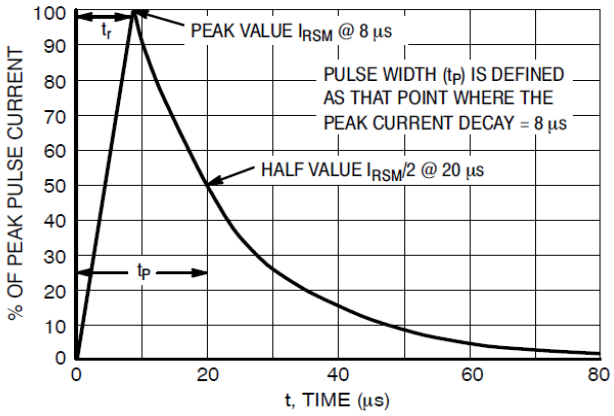

Figure 2. Power Derating Curve

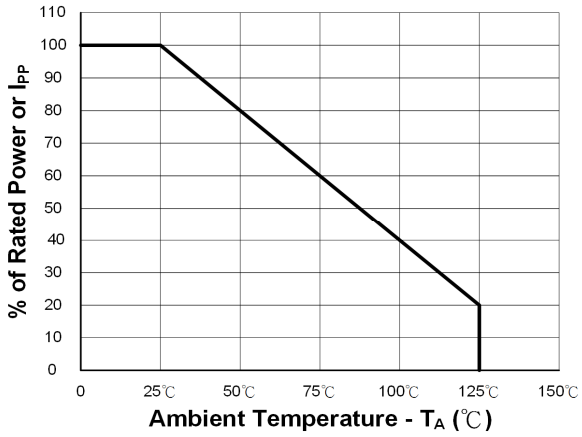

Figure 3. Clamping Voltage vs. Peak Pulse Current (TLP)

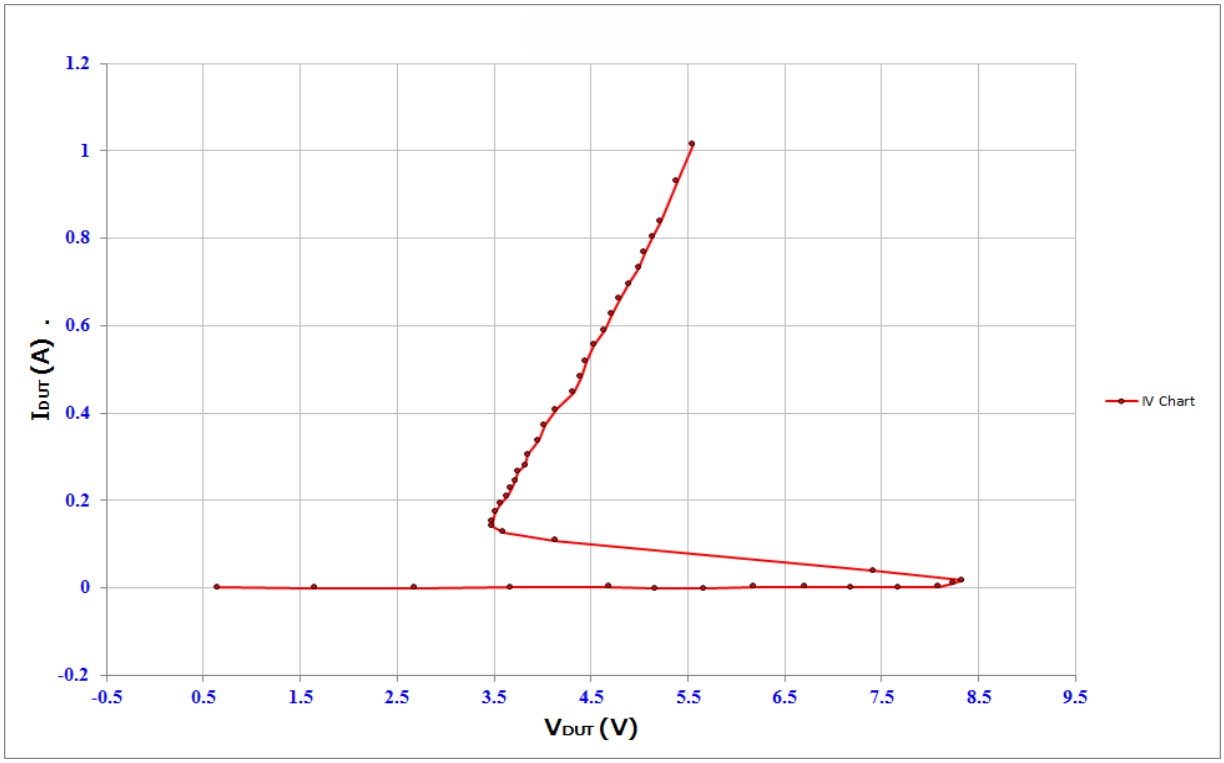

Figure 4. Typic Breakdown Voltage vs. Temperature

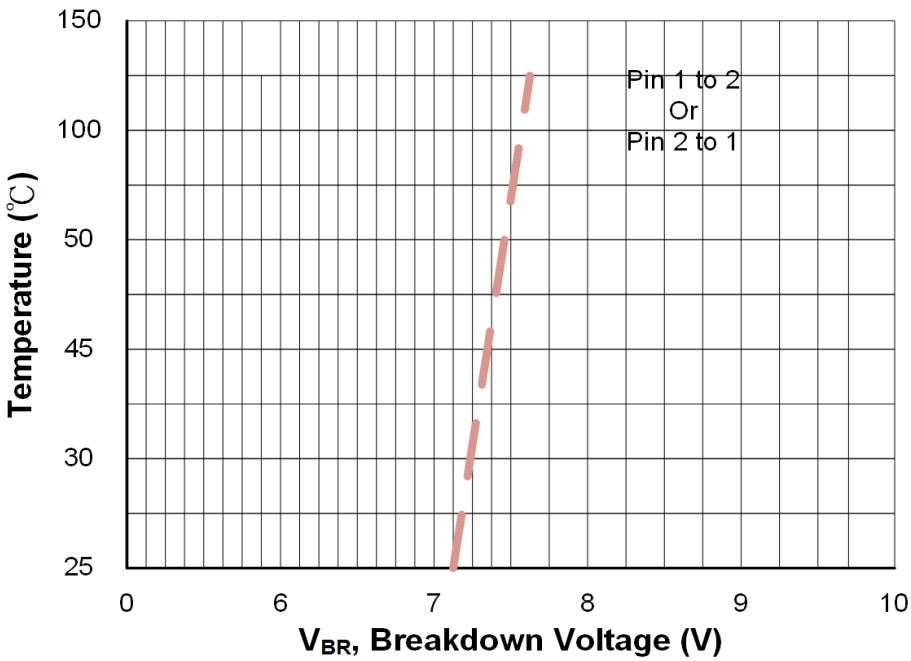

Figure 5. Typic Reverse Current vs. Temperature

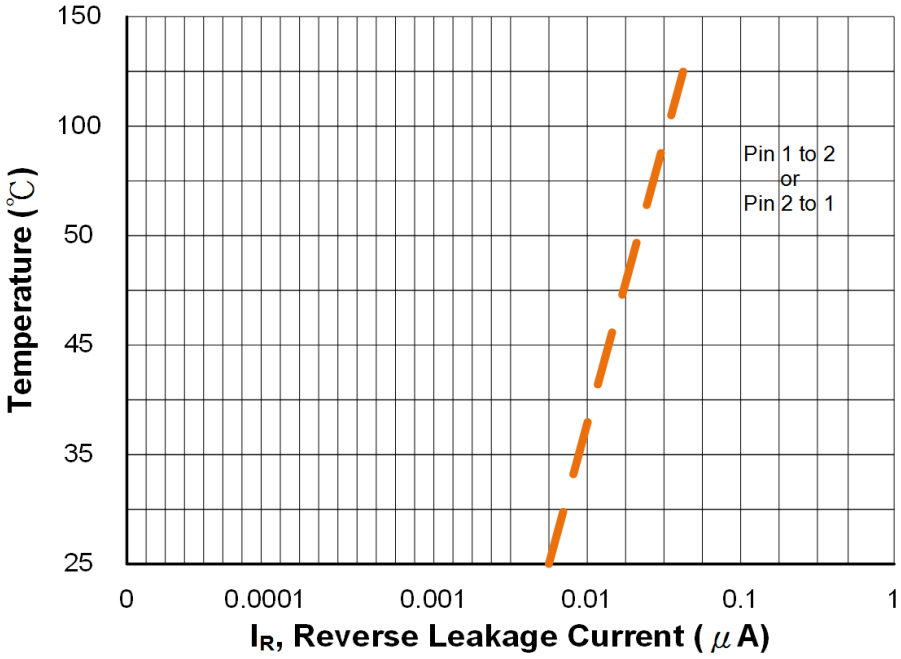

Figure 6. Typic Capacitance vs. Reverse Voltage

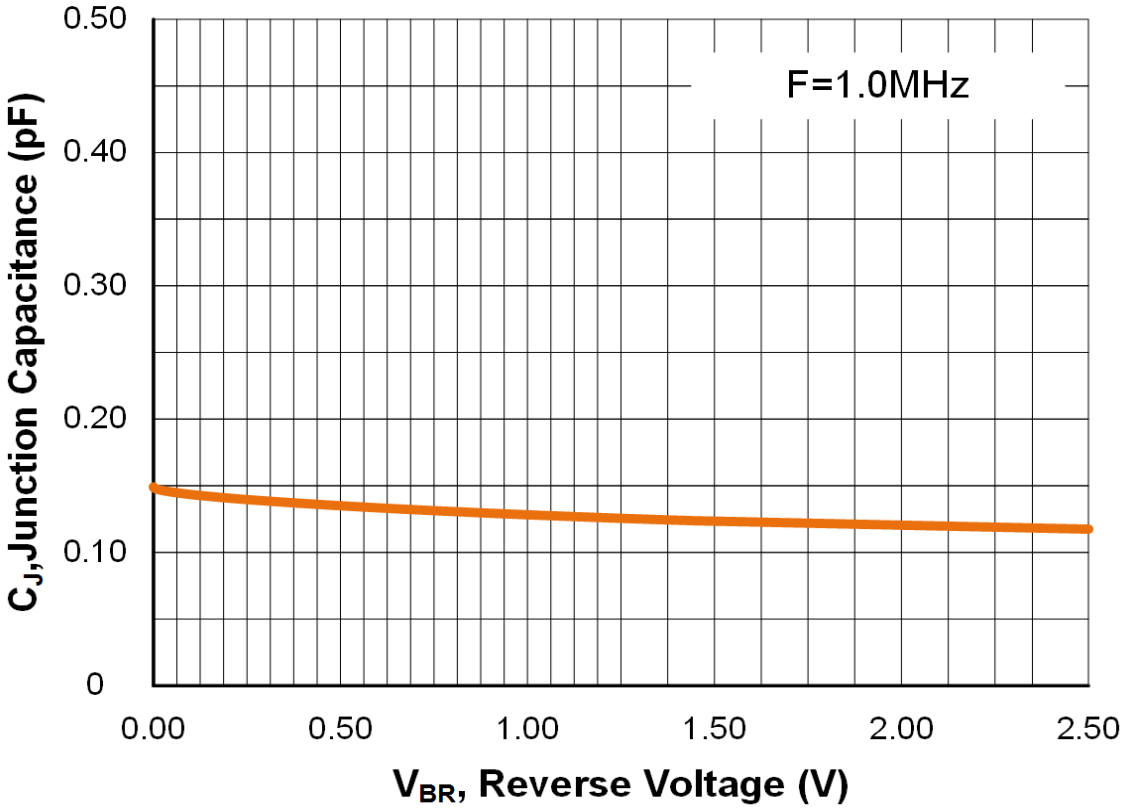

Figure 7. Transmission Line Pulse (TLP)

Transmission Line Pulse (TLP) is a measurement technique used in the Electrostatic Discharge (ESD) arena to characterize performance attributes of devices under ESD stresses. TLP is able to obtain current versus voltage (I−V) curves in which each data point is obtained with a 100 ns long pulse, with currents up to 40 A. TLP was first used in the ESD field to study human body model (HBM) in integrated circuits, but it is an equally valid tool in the field of system level ESD. The applicability of TLP to system level ESD is illustrated in Figure 1, which compares an 8 kV IEC 61000−4−2 current waveform with TLP current pulses of 8 and 16 A. The current levels and time duration for the pulses are similar and the initial rise time for the TLP pulse is comparable to the rise time of the IEC 61000−4−2's initial current spike. This application note will give a basic introduction to TLP measurements and explain the datasheet parameters extracted from TLP for SDI Technology's protection products.

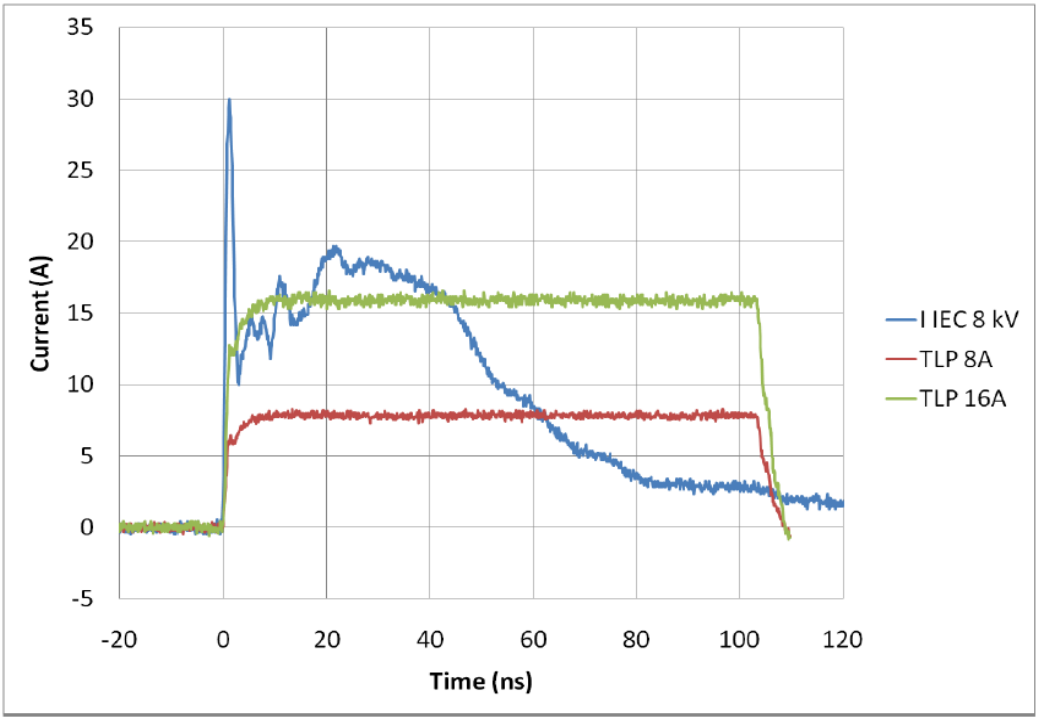

Comparison Between 8 kV IEC 61000−4−2 and 8 A and 16 A TLP Waveforms

Comparison of a CurrentWaveform of IEC 61000−4−2with TLP Pulses at 8 and 16 A.
The IEC 61000−4−2 ESD waveforms is true to the Standard and is shown here as captured on an oscilloscope.
The points A, B, and C show the points on the aveforms specified in IEC 61000−4−2.
Transmission Line Pulse (TLP) Version.

Figure 8. Eye diagram on HDMI 2.0, USB 3.0 and USB 3.1

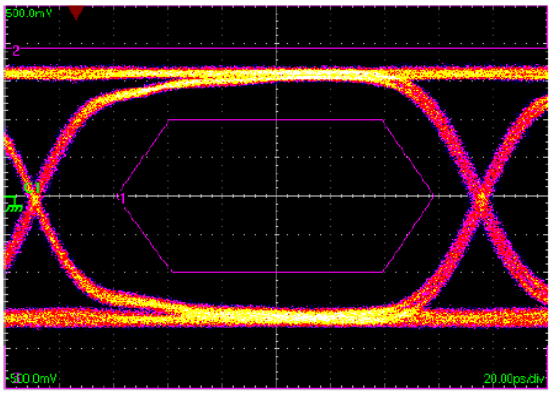

Fig. 8.1. @HDMI 2.0 mask at 5.94 Gbps per channel (Without Component)

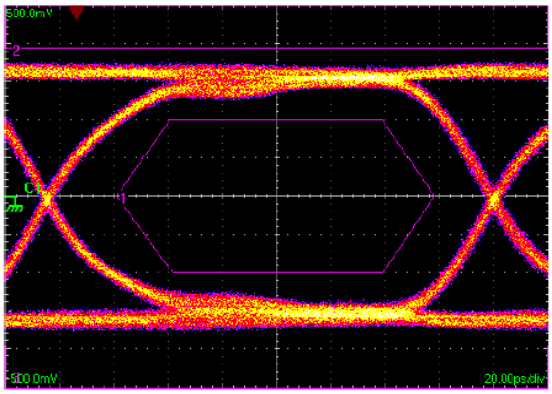

Fig. 8.2. @HDMI 2.0 mask at 5.94 Gbps per channel (With Component)

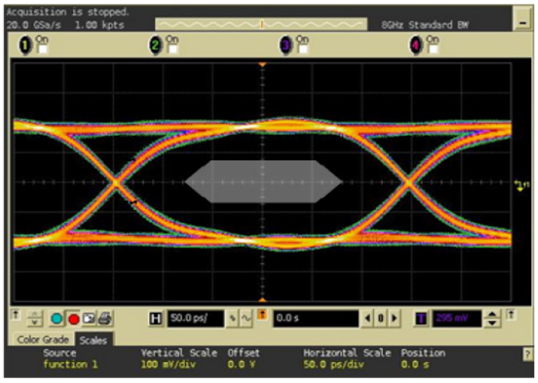

Fig. 8.3. @USB 3.0 mask at 5.0 Gbps per channel (Without Component)

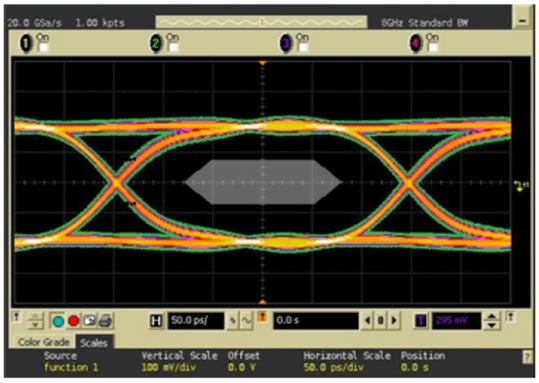

Fig. 8.4. @USB 3.0 mask at 5.0 Gbps per channel (With Component)

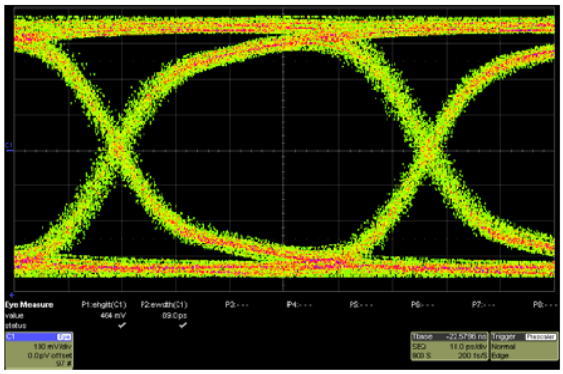

Fig. 8.5. @USB 3.1 mask at 10.0 Gbps per channel (Without Component)

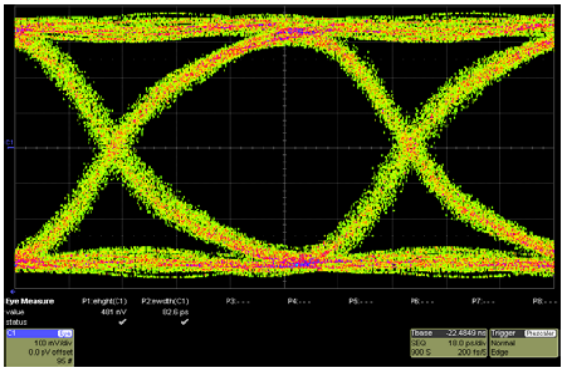

Fig. 8.6. @USB 3.1 mask at 10.0 Gbps per channel (With Component)

Figure 9. Layout Guidelines

Steps must be taken for proper placement and signal trace routing of the ESD protection device in order to ensure the maximum ESD survivability and signal integrity for the application. Such steps are listed below.

1. Place the ESD protection device as close as possible to the I/O connector to reduce the ESD path to ground and improve the protection performance.

1.1. In USB 3.0/3.1 applications, the ESD protection device should be placed between the AC coupling capacitors and the I/O connector on the TX differential lanes as shown in below drawing In this configuration, no DC current can flow through the ESD protection device preventing any potential latch-up condition. For more information on latchup considerations, see below description on below drawing.

2. Make sure to use differential design methodology and impedance matching of all high speed signal traces.

2.1. Use curved traces when possible to avoid unwanted reflections.

2.2. Keep the trace lengths equal between the positive and negative lines of the differential data lanes to avoid common mode noise generation and impedance mismatch.

2.3. Place grounds between high speed pairs and keep asmuch distance between pairs as possible to reduce crosstalk.

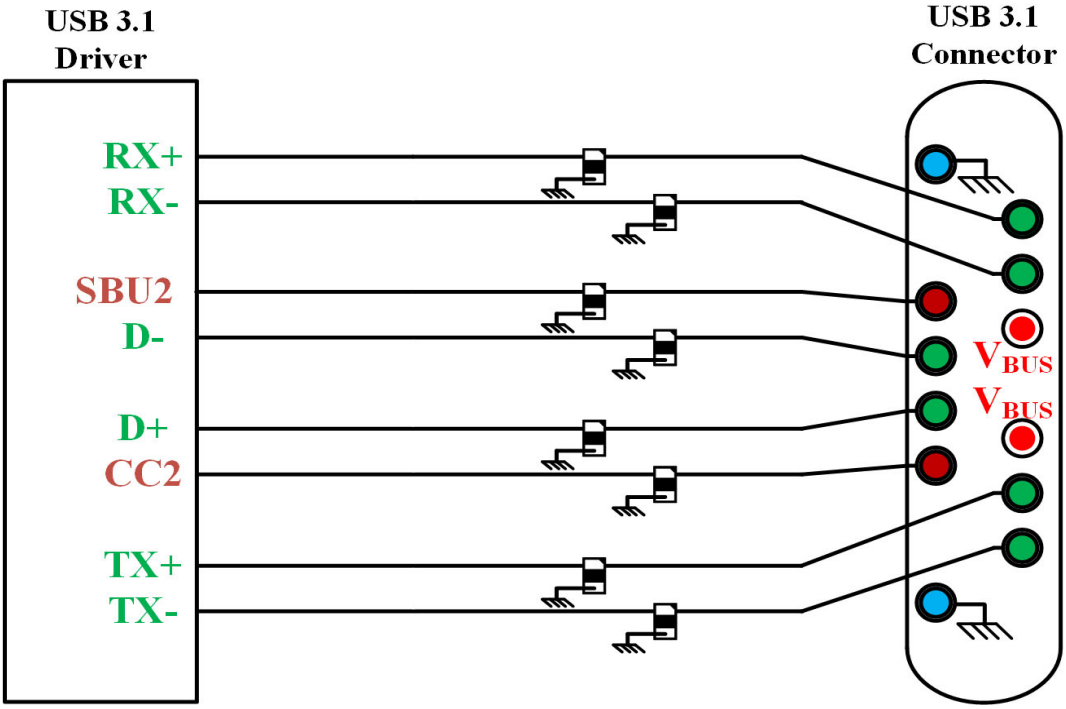

Fig. 9.1. USB 3.0 / 3.1 Type−A Layout Diagram

DFN0603 PACKAGE OUTLINE & DIMENSIONS

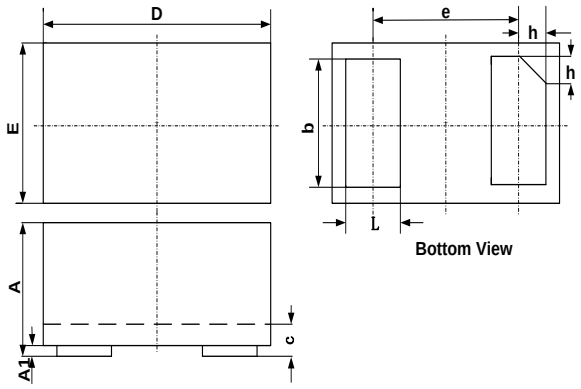

SYM	DIMENSIONS		
	MILLIMETERS		
	MIN	NOM	MAX
A	0.230		0.330
A1	0.000	0.020	0.050
b	0.215	0.245	0.275
c	0.120	0.150	0.180
D	0.550	0.600	0.650
e	0.355 BSC		
E	0.250	0.300	0.350
L	0.160	0.190	0.220
h	0.079 BSC		

Suggested Land Pattern

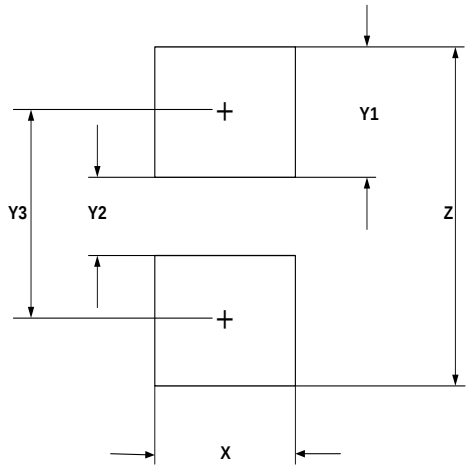

SYM	DIMENSIONS	
	MILLIMETERS	INCHES
X	0.30	0.012
Y1	0.25	0.010
Y2	0.15	0.006
Y3	0.40	0.016
Z	0.65	0.026

Shanghai Leiditech Electronic Co.,Ltd
Email: sale1@leiditech.com
Tel : +86- 021 50828806
Fax : +86- 021 50477059