HX4428-S/HX4428-P

Dual 4A-Peak Low-Side MOSFET Drivers

General Description

The HX4426/4427/4428 series of dual low-side MOSFET drivers are manufactured on a BiCMOS/DMOS process, providing efficient power usage and high reliability. These drivers translate input logic levels from TTL or CMOS to output voltage levels that swing within 25 mV of the positive supply or ground. This is in contrast to bipolar devices, which can only swing to within 1V of the supply. The HX4426/4427/4428 drivers are available in three configurations: dual inverting, dual non-inverting, and one inverting plus one non-inverting output. They are designed to replace the HX426/427/428 and HX1426/1427/1428, offering improved electrical performance and ruggedness.

The HX4426/4427/4428 drivers are highly durable, capable of withstanding up to 500 mA of reverse current (either polarity) without latching and up to 5V noise spikes (either polarity) on the ground pins. These drivers are primarily intended for driving power MOSFETs, but are also suitable for driving other loads that require low-impedance, high peak current, and fast switching time. Other potential applications include driving heavily loaded clock lines, coaxial cables, or piezoelectric transducers. It is important to note that the total driver power dissipation must not exceed the package's limits. For high power and narrow pulse applications, see HX4126/4127/4128.

Features

- 4A-Peak Output Current
- Latch-Up Protected to >500 mA Reverse Current
- 4.5V to 25V Operating Range
- Switches 1000 pF in 25 ns
- Low Quiescent Supply Current
  - 4 mA at Logic 1 Input
  - 400 µA at Logic 0 Input
- Matched Rise and Fall Times
- 7Ω Output Impedance
- <40 ns Typical Delay
- Logic-Input Protection to –5V
- Logic-Input Threshold Independent of Supply Voltage
- 6 pF Typical Equivalent Input Capacitance
- 25 mV Max. Output Offset from Supply or Ground

Applications

- MOSFET Driver
- Piezoelectric Transducer Driver
- Coax Cable Driver
- Clock Line Driver

Pin Configuration and Functions

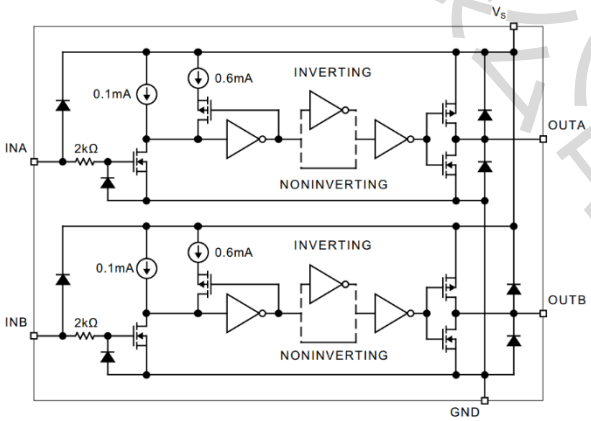

Inverting

Functional Block Diagram

SOP8/DIP8

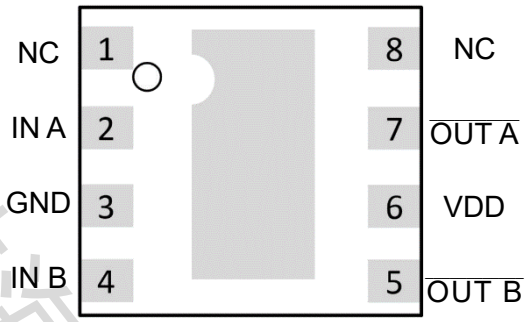

Dual Inverting

Pin Diagram

ELECTRICAL CHARACTERISTICS					
Parameter	**Sym.**	**Min.**	**Typ.**	**Max.**	**Units**
Input					
Logic 1 Input Voltage	VIH	2.4	1.4	—	V
		2.4	**1.5**	—	
Logic 0 Input Voltage	VIL	—	1.1	0.8	V
		—	**1.0**	**0.8**	
Input Current	IIN	**–1**	—	**1**	μA
Output					
High Output Voltage	VOH	**V_S –**	—	—	V
Low Output Voltage	VOL	—	—	**0.025**	V
Output Resistance	R_O	—	6	10	Ω
		—	**8**	**12**	
Peak Output Current	IPK	—	**1.5**	—	A
Latch-Up Protection	I	**>500**	—	—	mA
Switching Time					
Rise Time	t_r	—	18	30	ns
		—	**20**	**40**	
Fall Time	t_f	—	15	20	ns
		—	**29**	**40**	
Delay Time	tD1	—	17	30	ns
		—	**19**	**40**	
Delay Time	tD2	—	23	50	ns

珠海海芯电子有限公司

ELECTRICAL CHARACTERISTICS (CONTINUED)					
Parameter	**Sym.**	**Min.**	**Typ.**	**Max.**	**Units**
Pulse Width	tPW	**400**	—	—	ns
Power Supply					
Power Supply Current	IS	0.6	1.4	4.5	mA
		—	**1.5**	**8**	
Power Supply Current	IS	—	0.18	0.4	mA
		—	**0.19**	**0.6**	

TEMPERATURE SPECIFICATIONS					
Temperature Ranges					
Maximum Junction Temperature	T_J	—	—	+150	°C
Storage Temperature Range	T_S	–65	—	+150	°C
Lead Temperature	—	—	—	+300	°C
Junction Operating Temperature	T_J	0	—	+70	°C
Junction Operating Temperature	T_J	–40	—	+85	°C
Package Thermal Resistances					
Thermal Resistance, PDIP 8-Ld	θJA	—	130	—	°C/W
Thermal Resistance, PDIP 8-Ld	θJC	—	42	—	°C/W
Thermal Resistance, SOIC 8-Ld	θJA	—	120	—	°C/W
Thermal Resistance, SOIC 8-Ld	θJC	—	75	—	°C/W
Thermal Resistance, MSOP 8-Ld	θJA	—	250	—	°C/W

Aplication Informa

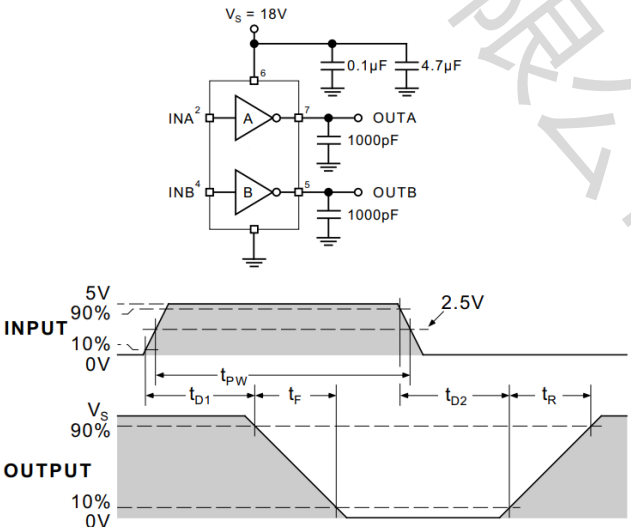

Switching Time Test Circuit

珠海海芯电子有限公司

Disclaimer

All products due to improve reliability, function or design or for other reasons, product specifications and data are subject to change without notice.

Zhuhai Haixin Electronics Co., Ltd., branches, agents, employees, and all persons acting on its or their representatives (collectively, the "zhuhai Haixindianzi"),assumes no responsibility for any errors, inaccuracies or incomplete data contained in the table or any other any disclosure of any information related to the product.(www.haixindianzi.com)

Zhuhai Haixin makes no guarantee, representation or warranty on the product for any particular purpose of any goods or continuous production. To the maximum extent permitted by applicable law on Zhuhai Haixin relinquished: (1) any application and all liability arising out of or use of any products; (2) any and all liability, including but not limited to special, consequential damages or incidental ; (3) any and all implied warranties, including a particular purpose, non-infringement and merchantability guarantee.

Statement on certain types of applications are based on knowledge of the product is often used in a typical application of the general product Haixin Zhuhai demand that the Zhuhai Haixin of. Statement on whether the product is suitable for a particular application is non-binding. It is the customer's responsibility to verify specific product features in the products described in the specification is appropriate for use in a particular application. Parameter data sheets and technical specifications can be provided may vary depending on the application and performance over time. All operating parameters, including typical parameters must be made by customer's technical experts validated for each customer application. Product specifications do not expand or modify Zhuhai Haixin purchasing terms and conditions, including but not limited to warranty herein.

Unless expressly stated in writing, Zhuhai Haixin products are not intended for use in medical, life saving, or life sustaining applications or any other application. Wherein Haixin product failure could lead to personal injury or death, use or sale of products used in Zhuhai Haixin such applications using client did not express their own risk. Contact your authorized Zhuhai Haixin people who are related to product design applications and other terms and conditions in writing.

The information provided in this document and the company's products without a license, express or implied, by estoppel or otherwise, to any intellectual property rights granted to the Haixin act or document. Product names and trademarks referred to herein are trademarks of their respective representatives will be all.

Package Information

SOP8 (Package Outline Dimensions)

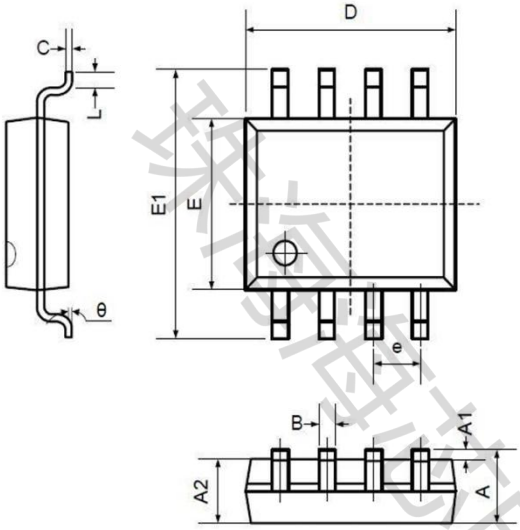

Symbol	Dimensions In Millimeters		Dimensions In Inches	
	Min	Max	Min	Max
A	1.350	1.750	0.053	0.069
A1	0.100	0.250	0.004	0.010
A2	1.350	1.550	0.053	0.061
B	0.330	0.510	0.013	0.020
C	0.190	0.250	0.007	0.010
D	4.780	5.000	0.188	0.197
E	3.800	4.000	0.150	0.157
E1	5.800	6.300	0.228	0.248
e	1.270TYP		0.050TYP	
L	0.400	1.270	0.016	0.050
θ	0°	8°	0°	8°

DIP8 (Package Outline Dimensions)

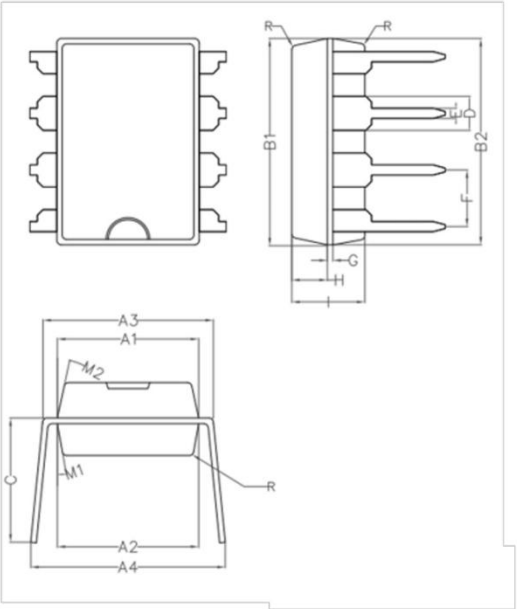

Symbol	Min	Non	Max
A1	6.28	6.33	6.38
A2	6.33	6.38	6.43
A3	7.52	7.62	7.72
A4	7.80	8.40	9.00
B1	9.15	9.20	9.25
B2	9.20	9.25	9.30
C		5.57	
D		1.52	
E	0.43	0.45	0.47
F		2.54	
G		0.25	
H	1.54	1.59	1.64
I	3.22	3.27	3.32
R		0.20	
M1	9°	10°	11°
M2	11°	12°	13°

珠海海芯电子有限公司