APPROVAL SHEET

Customer:	
Customer Part NO.	
Part NO.	**SVB080M470GABPC97V00A**
Item:	**47UF/80V**
Catalog Series:	**SVB Series**
Date of Issue:	**MAY.15.2026**
Approved NO. :	**SD20260500390**

BUYER'S STAMP	Approved by			

Su'scon	Submitted by			
	Approval	Check	Affirm	Design
东莞冠坤电子有限公司 研发工程专用章	工程部 2026-05-15 鐘 華	工程部 2026-05-15 張家英	工程部 2026-05-15 莫明強	工程部 2026-05-15 丁培

Su' scon ®

DONG GUAN HEYUE ELECTRONIC CO., LTD

TEL:0769-8308 6886
FAX:0769-8308 6886
Mail：sales016@heyuecap.com

Halogen Free RoHS COMPLIANT Environmental-Benefit Products

RECORD OF REVISION

NO.	VERSION	REASON	DATE	CHECKED	REMARKS
1	A00	First Release	2026-05-15	莫明強	
2					
3					
4					
5					
6					
7					
8					
9					
10					
11					
12					
13					
14					
15					
16					
17					
18					
19					
20					
21					
22					
23					
24					
25					
26					
27					
28					
29					
30					

SVB Specification For Approval

NO.	Customer Part No.	Specification	*Su'scon* Part No.
1		EC,47uF/80V	SVB080M470GABPC97V00A
2			
3			
4			
5			
6			
7			
8			
9			
10			
11			
12			
13			
14			
15			
16			
17			
18			
19			
20			
21			
22			
23			
24			
25			
26			
27			

Su'scon Conductive Polymer Hybrid Aluminum Electrolytic Capacitors

Explanation of parts numbers
For Conductive Polymer Hybrid Aluminum Electrolytic Capacitors

SVB **080** **M** **470** **G** **AB** **P** **C97** **V** **00** **R/A**

VOLTAGE CODE:

Rate Voltages:
016=16V
025=25V
035=35V
050=50V
063=63V
080=80V
100=100V
125=125V

SERIES

RATE CAPACITANCE:

3R3=	3.3uF
4R7=	4.7uF
6R8=	6.8uF
470=	47uF
271=	270uF
391=	390uF
102=	1000uF

Capacitance Tolerance:

K= ± 10%
M= ± 20%
A= -0%~+ 20%
V= -10%~+ 20%

Diameter Code (Φ)

3	B
4	C
5	D
6.3	E
8	F
10	G

Length of AL. Case: L (mm)

T=Convex rubber; P=Flat Rubber.etc

See the detail

1) KKK= Su'scon standard product;
2) C97= Customer No.(for customization product)
(Could be modified for customer)

Lead length (mm)

Code No.17 is S,Code No.18、19 be filled in "00" is stand for General Long Lead

R=RoHS/ Free Halogen A=Automotive products

TYPE CODE DESCRIPTION:

RADIAL	C=Lead Cut
	S=Long Lead
	L=Facing cathode:Lead Cut and Bending (turn right)
	Z=Facing cathode:Lead Cut and Bending (turn left)
	P=Taping (Ammo pack)
	V=V-chip Type (SMD)

CONTENTS

1. Product Dimensions,ESR,maximum permissible ripple current tec.(電容尺寸、ESR、最大紋波等)

1.1 Product Dimensions(產品尺寸)

1.2 Product Temperture,Tolerance,Voltage,Leakage current,ESR,maximum permissible ripple current (產品溫度、誤差、電壓、漏電流、ESR、最大紋波)

2. Application(應用)

3. Part Number System(料號解釋)

4. Construction(電容內部結構)

5. Characteristics(電容特性)

5.1 Capacitance.(電容量)

5.2 Tangent of loss angle(損失角)

5.3 Leakage current(漏電流)

5.4 Equivalent series resistance(等效串聯電阻)

6.AEC-Q200 Experimental project(AEC-Q200實驗項目)

7. Product Marking(產品標識)

8. Instructions of Capacitors (產品使用說明)

DONG GUAN KUAN KUN ELECTRONIC CO., LTD

YIN HE INDUSTRIAL ZONE, QING XI TOWN, DONG GUAN CITY, GUANG DONG CHINA (P.R.O.C)

TEL: +86-769- 83086886

FAX: +86-769- 83086886

FOR APPROVAL

1.CHARACTERISTICS TABLE

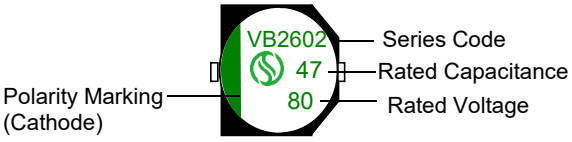

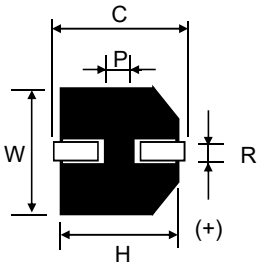

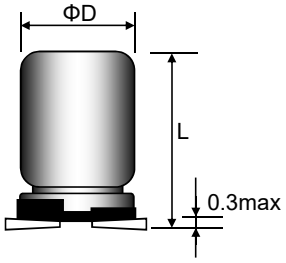

(Unit : mm)

Size	ΦD±0.5	L±0.3	W±0.2	H±0.2	C±0.2	R	P±0.2
6.3*6	6.3	6.0	6.6	6.6	7.3	0.5~0.8	2.1
6.3*7.7	6.3	7.7	6.6	6.6	7.3	0.5~0.8	2.1
8*10.5	8	10.5	8.3	8.3	9.0	0.7~1.1	3.2
10*10.5	10	10.5	10.3	10.3	11.0	0.7~1.3	4.5
10*12.5	10	12.5	10.3	10.3	11.0	0.7~1.3	4.5
10*16.5	10	16.5	10.3	10.3	11.0	0.7~1.3	4.5

Customer:	Conductive Polymer Hybrid Aluminum Electrolytic Capacitors SVB Series	Su'scon Code

Electric Characteristics:

P/N	P/N	Cap. (uF)	Cap. Tol. (%)	Rate Volt. (V-DC)	Oper. Temp. (℃)	Nominal Case Size D*L(mm)	E.S.R 100K Hz Max(mΩ)	Leakage Current Max (uA)	D.F. Max (%)	R.C 100K Hz (mA rms)	Load Life (hours)
	SVB080M470GABPC97V00A	47	±20	80	125	10*10.5	36	38	16	1360	4000

REMARKS:

1. Capacitance Test:	at 20℃, 120 Hz.
2. Operating temperature:	-55℃~ +125℃
3. ESR Test:	at 20℃, 100K Hz.
4. Leakage Current Test:	at 20℃ for 2 minutes.
5. Dissipation Factor Test:	at 20℃, 120 Hz.
6. Ripple Current Test:	at 125℃, 100 KHz ;
7. Load Life:	4000 hours, with application of working voltage at 125℃.
Capacitance Change:	Within±30% of initial value;
tanδ:	200% or less of initial specified value;
ESR:	200% or less of initial specified value;
Leakage Current:	Initial specified value or less;
8. Biased Humidity	1000 hours 85°C/85%RH. Rated Voltage.
Capacitance Change :	Within±30% of initial value;
tanδ:	200% or less of initial specified value;
ESR:	200% or less of initial specified value;
Leakage Current:	Initial specified value or less.
9.Special requirements:	Conform to the AEC-Q200.
10. when have characteristic requested :	Load life&shelf life test judgment standard reference to our cataloge.

●SPECIFICATION

Voltage Range	16V~125V
Leakage Current	See characteristic table (After rated voltage applied for 2 minutes)
Dissipation Factor	Measurement Frequency: 120Hz. Temperature: 20℃

●RIPPLE CURRENT COEFFICIENTS

Capacitance (μF)	Frequency (Hz)			
	100≦F＜1K	1K≦ F＜10K	10K≦F＜100K	100K≦F
4.7＜C≦33	0.05	0.32	0.67	1.00
33＜C	0.10	0.35	0.70	1.00

2. Application（應用）

These specifications specify the Conductive Polymer Hybrid Aluminum Electrolytic Capacitors.

此規格書適用於混合型導電性高分子鋁電容器

3. Part Number System(料號系統)

See explanation of parts numbers table

參見『料號詮釋』列表

4. Construction (結構圖)

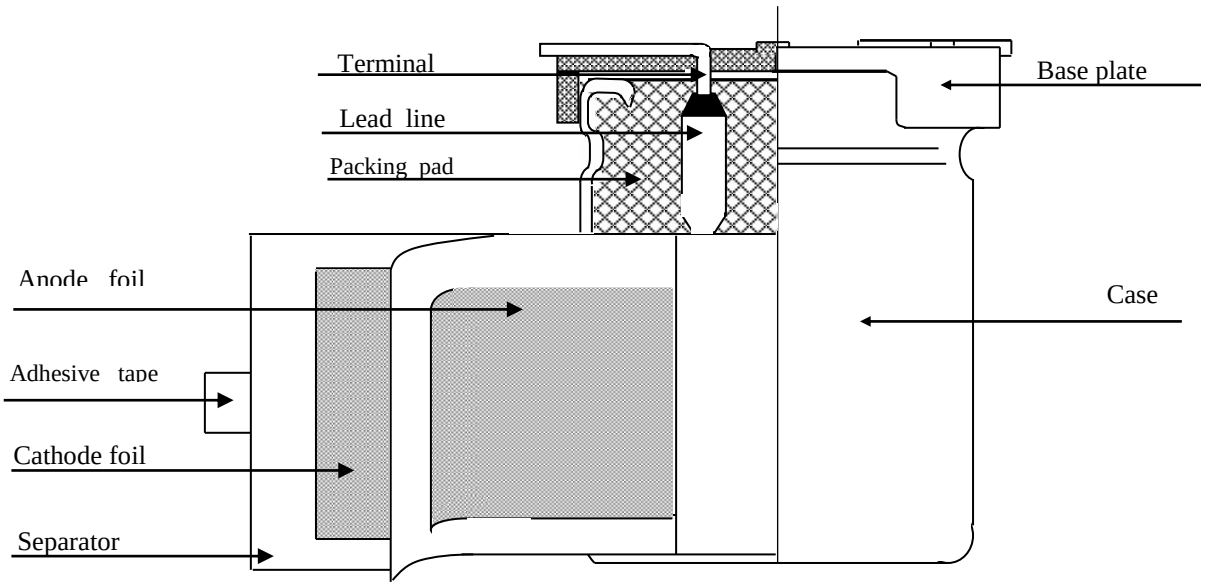

V-Chip type capacitors component

Part name	Materials
Terminal	Tinned copper-ply wire
Lead line	Aluminum 99.90%
Packing pad	Synthetic rubber
Anode Foil	Formed aluminum 99.9% over
Cathode Foil	Titanium foil
Separator	Poly(ethylene terephthalate)
Adhesive Tape	Poly Imide film
Base plate	Polyphenylene oxide;Glass fibre
Case	Aluminum 98%+PU coating

5. Characteristics（特性）

Test environment (測試環境)

Standard atmospheric conditions（標准大氣條件）

Unless otherwise specified, the standard range of atmospheric conditions for making measurements and tests is as follows:

除特别要求外，标准的大气条件范围进行测量和测试如下:

Ambient temperature: 15℃ to 35℃

環境溫度：15℃ to 35℃

Relative humidity: 45% to 75%

環境濕度：45% to 75%

Air Pressure : 86kPa to 106kPa

空气压力:86 kpa to 106 kpa

The test conditions shall comply with JIS C 5102

测试条件应符合JIS C 5102 1994

Operating temperature range (操作溫度範圍)

The ambient temperature range at which the capacitor can be operated continuously at rated voltage is -55℃ to 125℃.

此規格電容可以在額定电压连续操作溫境範圍 -55℃ to 125℃：

ITEM(項目)		PERFORMANCE（電氣性能）
5.1	Capacitance(Cap.) 靜電容量	CONDITION（條件）： Measuring frequency： 120Hz 測試頻率： 120Hz Measuring voltage： 0.5V rms max 測量電壓： 0.5V rms max Measuring circuit： Series equivalent circuit 電量電路 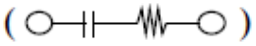 Criteria： Shall be within the specified capacitance tolerance. 標 准: 在規定的电容公差值範圍內。

ITEM(項目)		PERFORMANCE（電氣性能）
5.2	Tangent of loss angle(tanδ) 損失角	CONDITION（條件）： Measuring frequency： 120Hz 測試頻率： 120Hz Measuring voltage： 0.5V rms max 測量電壓： 0.5V rms max Measuring circuit： Series equivalent circuit 電量電路 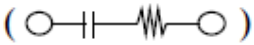 Criteria： Shall not exceed the values specified for item 6.3 Less than the initial limit(See item 6.3).低於『第6.3項』規格值
5.3	Leakage current(LC.) 漏電流	CONDITION（條件）： at 20℃ for 2 minutes. 在20℃條件下充電2分鐘。 Criteria： Leakage Current :≦ 0.01 CV C= Nominal Capacitance (μF) , V= Rated Voltage (V) 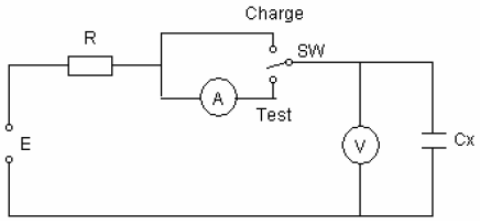 NOTE: If any doubt arises,measure the leakage current after following voltage treatment. DC rated voltage are applied to the capacitors for 120 minutes at 125℃. 當產生疑問的時候，用以下電壓處理後測定。電壓處理：125℃，連續加載120分鐘的電壓。加載電壓為額定電壓。
5.4	Equivalent series resistance(ESR.) 等效串联电阻	CONDITION（條件）： Measuring frequency： 100kHz 測試頻率： 100kHz Measuring temperature: 20±2℃ 測試環境： 20±2℃ Measuring point ：2mm max from the surface of a sealing resin on the lead wire. 測量點：電容器在測量的時候，插入導針底部2mm處。 Criteria （標准） Less than the initial limit(See item 6.3).低於『第6.3項』規格值

6.AEC-Q200 Experimental project(AEC-Q200實驗項目)

1. Scope 適用范圍 ：

This specification applies to aluminium electrolytic capacitor , used in electronic equipment .

本說明對于用電子儀器設備進行檢測之導電性高分子電解電容器適用.

2. TABLE-TABLE OF METHODS REFERENCED ALUMINUM ELECTROLYTIC CAPACITORS表-導電性高分子電解電容器參考方法

NO.	Stress应力方式	Reference参考方法	Additional Requirements 附加要求	SPECIFICATION 規格
1	Pre- and Post- Stress Electrical Test 应力测试前后电气测试	User spec.用户规格	Test is performed except as specified in the applicable stress reference and the additional requirements in Table 3.需进行测试，除了适用的应力测试标准和表3中的附加要求指定之外。	In the experimental report 分布在試驗報告中
3	High Temperature Exposure (Storage) 高温存储	MIL-STD-202 Method 108	1000 hrs. at rated operating temperature (e.g. 125°C part can be stored for 1000 hrs at 125°C. Same applies for 85°C & 105°C). Unpowered. Measurement at 24±4 hours after test conclusion. 在额定工作温度下放置器件1000小时（例如：125℃的产品可以在125℃下存储1000小时，同样地也适用于85℃和105℃的产品），不通电。试验结束后24±4小时内进行测试。	Capacitance change Tan δ . ESR rate of change: please have a look at this eries of shelf life standard. less than specified value . Appearance : no abnormal . 容量.損失角,阻抗的變化標準：請見該系列的放置壽命說明標準 泄漏電流：低于初期規定值 . 外觀：無異常 .
4	TemperatureCycling 温度循环	JESD22Method JA-104	1000 cycles (-55°C to 125°C) Note: If 85°C or 105°C part the 1000 cycles will be at that temperature rating. Measurement at 24±4 hours after test conclusion. 30min maximum dwell time at each temperature extreme. 1 min. maximum transition time. 1000个循环（-55℃到125℃）。注意：如果85℃或105℃的产品，1000个循环应在其温度等级下进行。试验结束后24±4小时内进行测试。每个温度的停留时间不超过30分钟，转换时间不超过1分钟。	Capacitance change : within ±20% of the initial specified value. Tan δ :200% of initial specified value. Leakage current : less than specified value ESR: less than specified value . Appearance : no abnormal . 靜電容量變化： 最初規定值的 ±20%以內. 損失角：規定值2倍 , 泄漏電流：低于規定值, 阻抗值:低于規定值, 外觀: 無異常 .
7	Biased Humidity 高温高濕	MIL-STD-202 Method 103	1000 hours 85°C/85%RH. Rated Voltage. Measurement at 24±4 hours after test conclusion. 在温度85℃，湿度85%的条件下放置1000小时。额定电压。试验结束后24±4小时内进行测试。	Capacitance change : within ±20% of the initial specified value. Tan δ :less than specified value . Leakage current : less than specified value ESR: less than specified value . Appearance : no abnormal . 靜電容量變化 :最初規定值的 ±20%以內. 損失角：低于規定值 , 泄漏電流：低于規定值, 阻抗值:低于規定值, 外 觀：無異常 .
8	Operational Life 工作寿命	MIL-STD-202 Method 108	Note: 4000 hours @ 125°C. If 85°C or 105°C part will be tested at that temperature. Rated Voltage applied. Measurement at 24±4 hours after test conclusion. 注意：4000小時@ 125℃。如果85℃或105℃的产品，应在其温度下进行。施加额定的电压。试验结束后24±4小时内进行测试。	Capacitance change Tan δ .Rate of change: please have a look at this eries of load life standard. less than specified value . Appearance : no abnormal . 容量.損失角,的變化標準:請見該系列的負荷壽命說明標準 泄漏電流：低于初期規定值 . 外觀：無異常 .
9	External Visual 外观	MIL-STD-883 Method 2009	Inspect device construction, marking and workmanship. Electrical Test not required. 检查器件结构，标识和工艺质量。不要求电气测试。	In the experimental report 分布在試驗報告中
10	Physical Dimension 尺寸	JESD22Method JB-100	Verify physical dimensions to the applicable device detail specification. Note: User(s) and Suppliers spec. Electrical Test not required. 按适用的器件规格验证物理尺寸。注意：用户和供应商规格。不要求电气测试。	Do judgement, according to the specification sheet. 依據規格書判斷

NO.	Stress应力方式	Reference参考方法	Additional Requirements 附加要求	SPECIFICATION 规格
12	Resistance to Solvents 耐 溶剂	MIL-STD-202 Method 215	Note: Also aqueous wash chemical - OKEM clean or equivalent. Do not use banned solvents. 注意：水洗清洗剂-OKEM清洗剂或其它相同的溶剂。不要使用禁止的溶剂。	Capacitance change : within ± 5% of the initial specified value. Tan δ :less than specified value .Leakage current : less than specified value , ESR: less than specified value. Print without loss, Appearance : Print without loss, appearance without exception 靜電容量變化:最初規定值的± 5%以內. 損失角:低于規定值 . 泄漏電流:低于規定值, 阻抗值:低于規定值, 外观：印刷字体无脱落及外观无异常
13	Mechanical Shock 机械冲击	MIL-STD-202Method 213	Figure 1 of Method 213. Condition C 方法213图表1，条件C。 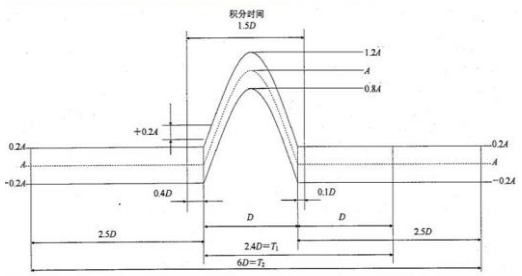 	Capacitance change : within ± 5% of the initial specified value. Tan δ :less than specified value .Leakage current : less than specified value . ESR: less than specified value .Appearance : no abnormal . 靜電容量變化: 最初規定值的± 5%以內. 損失角：低于規定值 , 泄漏電流：低于規定值, 阻抗值:低于規定值, 外觀：無異常 .
14	Vibration 振动	MIL-STD-202Method 204	5g's for 20 minutes 12 cycles each of 3 orientations. Note: Use 8"X5" PCB .031" thick with 7 secure points on one 8" side and 2 secure points on corners of opposite sides. Parts mounted within 2" from any secure point. Test from 10-2000 Hz. 5克的力20分钟，三个方向每个方向12个循环。注意：使用8"X5" 印刷线路板，.031" 厚，在长的一边有7个固定点，在对面的边的角有2个固定点。产品在距离固定点2”内安装。测试频率从10-2000赫兹。	Capacitance change : within ± 5% of the initial specified value. Tan δ :less than specified value .Leakage current : less than specified value , ESR: less than specified value . Appearance:No damage or leakage of electrolyte . 靜電容量變化:最初規定值的± 5%以內. 損失角:低于規定值 . 泄漏電流:低于規定值 , 阻抗值:低于規定值,無損傷或電解液漏出 .
15	Resistance to Soldering Heat 焊錫耐熱	MIL-STD-202 Method 210	Condition B no pre-heat of samples. Note: Single Wave Solder. Procedure 1 with solder within 1.5mm of device body for Leaded and 0.75mm for SMD. SMD – remove carrier. 条件B，样品不进行预热。注意：单一波峰焊。按程序1焊接，对于引脚器件浸入器件本体的1.5mm的深度，对于表面贴装元件为0.75mm。表面贴装元件-去除载体。	Capacitance change : within ± 10% of the initial specified value. Tan δ :less than specified value .Leakage current : less than specified value . ESR: less than specified value . 靜電容量變化:最初規定值的± 10%以內. 損失角：低于規定值 . 泄漏電流：低于規定值 . 阻抗值:低于規定值,

NO.	Stress应力方式	Reference参考方法	Additional Requirements 附加要求	SPECIFICATION 規格
18	Solderability 可焊性	J-STD-002	For both Leaded & SMD. Electrical Test not required. Magnification 50 X. Conditions: Leaded: Method A @ 235°C, category 3. SMD: a) Method B, 4 hrs @ 155°C dry heat @235°C b)Method B @ 215°C category 3 c)Method D category 3 @ 260°C. 用于引脚和表面贴装元件，不需要电气测试。放大倍数50倍。测试条件： 引脚产品：方法A@235℃，类别3。 表面贴装元件：a) 方法B, 4 小时@155℃干热@235℃ b)方法B @215℃ 类别3。 c)方法D 类别3 @260℃	The solder alloy shall cover the 95% or more of the dipped lead's area . 錫液要覆蓋導針浸入表面積 的95% 以上 .
19	Electrical Characterization 电气特性	User Spec.用户规格	Parametrically test per lot and sample size requirements, summary to show Min, Max, Mean and Standard deviation at room as well as Min and Max operating temperatures. 按批次和样品数量要求进行参数试验，总结列出室温下及最低，最高工作温度下器件的最小值，最大值，平均值和标准偏差。	Capacitance change :within ± 20% of the initial measured value. 靜電容量變化:最初測定值的± 20%以內. Leakage current : 漏电流： Under 125 ℃ for 10 times specification values. 125℃為規格值10倍以下. 105 ℃ for 8 times the specification values. 105℃為規格值8倍以下, 85 ℃ for 5 times the specification values. 85℃為規格值5倍以下, Tan δ :less than specified value . 損失角:低于規定值 .
20	Flammability(SMD apply) 可燃性(SMD適用)	UL-94	V-0 or V-1 Acceptable. Test is applicable to components having a resin case. V-0或V-1可接受。此项测试适用于有树脂底座的器件。	
21	Board Flex(SMD apply) 板弯曲(SMD適用)	AEC-Q200-005	60 sec minimum holding time. 至少60秒的支撑时间	
22	Terminal Strength (SMD) 端子强度（表面贴装元件）	AEC-Q200-006	無	Capacitance change : within ± 5% of the initial specified value. Tan δ :less than specified value .Leakage current : less than specified value . 靜電容量變化： 最初規定值的±5%以內. 損失角：低于規定值 . 泄漏電流：低于規定值
27	Surge Voltage 浪涌电压	JIS-C-5101-1	Rated surge voltage shall be applied (switch on) for 30 ± 5 seconds and then shall be applied (switch off) with discharge for 330± 5 seconds at room temperature . This cycle shall be repeated for 1000 cycles .Duration of one cycle is 6 ± 0.5 minutes . 在常溫下施加 (合上開關) 額定涌浪電壓 30 ± 5 秒, 然後停止施加 (斷開開關) 涌浪電壓並且放電 330 ± 5秒. 這個循環要重复 1000 次 . 以 6 ± 0.5 分鍾為一個循環周期 .	Capacitance change : within ± 15% of the initial specified value. Tan δ :less than specified value .Leakage current : less than specified value . ESR: less than specified value. Appearance : no abnormal . 靜電容量變化： 最初規定值的 ± 15%以內. 損失角：低于規定值 . 泄漏電流：低于規定值 . 阻抗值:低于規定值, 外 觀: 無異常 .

7. Product Marking (產品標識)

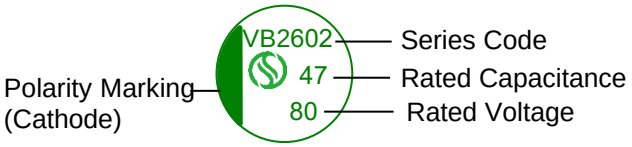

Note:

VB2602:

VB: SVB Series

2602：Date Code

Table

Date Code	Production Date
1604	The 4 th week of 2016Y
1652	The 52 th week of 2016Y
1812	The 12 th week of 2018Y
2602	The 2 th week of 2026Y

8. Instructions of Capacitors 電容器說明

8.1Cautions on use of Capacitor 電容器的使用注意事項

8.1.1.Polarity 極性

Solid electrolytic capacitors are polarized capacitors. Use capacitors after verifying their positive and negative polarities.If these capacitors are installed in the reverse polarity, its life may shorten because of increasing leakage current or short circuit.

混合型導電性高分子電容器是一種有極性電容器。在使用電容器之前必須驗証正負級。如果在使用過程中將正負級的位置弄反，則有可能大大縮短電容器的使用壽命甚至發生短路。

8.1.2.Prohibited circuits 禁止使用的回路

Conductive Polymer Hybrid Aluminum Electrolytic Capacitorsleakage current may become larger as the following conditions.

混合型導電性高分子電容器的漏電流在以下條件有可能會增大。

(a) Soldering

(a) 鍍焊錫時

(b) High temperature no-load test, high temperature and high humidity no-load test, rapidly changing temperature test, etc.

(b) 經過無外加電壓的高溫無負荷、高溫高濕無負荷、冷熱沖擊試驗等,漏電流也有增大的可能。

Avoid the use of Conductive Polymer Hybrid Aluminum Electrolytic Capacitorsin the following type of circuits because leakage current may increase.

以下回路有可能出現故障,請禁止使用

(a)High-impedance circuits (a) 高阻抗回路

(b)Coupling circuits (b) 藕合回路

(c)Time constant circuits (c) 時間恒定回路

(d)Other circuits that are significantly affected by LC (d)有關漏電流變而影響回路工作的情況

If you plan to use 2 or more Conductive Polymer Hybrid Aluminum Electrolytic Capacitorsin a series connection, please contact us before use.

為提高耐壓性而將兩個以上的混合型導電性高分子電容器串聯連接使用時,請與我們聯絡。

Overvoltage exceeding the rated voltage may not be applied even for an instant as it may cause a short circuit.

超過額定電壓易引起立即短路

Sudden charge and discharge restricted 快速充放電的限制

An excessive surge current by sudden charge or discharge may result in a short circuit or increase LC.

急速充電和放電而產生過大的突波電流，會造成短路或漏電流上升

8.1.3 Operating temperature 、voltages and ripple current

確認使用環境溫度、電壓和紋波電流

(a) Operating temperature must be under the category temperature range of specification.

(a) 使用溫度應控制在出廠規格書規定的使用溫度範圍內。

(b) Do not apply voltages exceeding the full rated voltage.

(b) 超過額定電壓的過電壓將會發生短路,因此,即使是瞬間也不得外加過電壓。

(c)Do not apply currents that excess the rated ripple current. When excessive ripple current is applied , the Conductive Polymer Hybrid Aluminum Electrolytic Capacitors may result in shorter life due to the internal heat increase.

(c)不得接通超過額定的紋波電流。
若接通過大的紋波電流,將會增高內部發熱,減少使用壽命。

8.1.4 Cleaning PCB 清洗基板

Check the following items before washing PC board with these detergents: high quality alcohol-based cleaning fluid such as Pine-α ST-100S, clean thru 750H, 750L, 710M, 750K or Techno Care FRW 14 through 17 or detergents including substitute freon as AK-225AES or IPA.

可使用Pine-α ST-00S, Clean thru750H,750L,710M,750K,Techno Care FRW14~17等高級乙醇類清洗劑或AK-225ES等氟利昂代替品,IPA等清洗劑清洗,清洗時,應確認以下內容。

(a) Use immersion or ultrasonic waves to clean within 2 minutes on polymer conductive type.

(b)The temperature of the cleaning fluid should be less than 60℃.

(c)Watch the contamination of the detergent as conductivity, pH,specific gravity,water content, etc.

(d)Do not store the Conductive Polymer Hybrid Aluminum Electrolytic Capacitorsin a location subject to gases from the cleaning fluid or in an airtight container after cleaning.

(e)Dry the PCB or Conductive Polymer Hybrid Aluminum Electrolytic Capacitorswith hot air that should be less thang the maximum operatin temperature. Please note that Indication may disappear when rubbing print side after washing as a cleaner.

(f)Please contact us for details about detergents,cleaning methods and about detergents other than those listed above.

(a)採用浸漬,超聲波等清洗方式時,清洗時間合計應控制在2分以內。

(b)清洗液溫度請控制在60℃以下。

(c)要進行清洗液的防污染管理(導電度,Ph值,比重,含水量等) 。

(d)清洗後,不要在清洗液環境中或密封容器中保管。

(e)用熱風（請在使用溫度範圍以下進行）烘乾基板和混合型導電性高分子電容器時,些許的清洗劑其液附在電容器表面上,若擦拭可抹去電容器上的標記,應予以注意。

(f)關於清洗劑和清洗方法等詳細情況以及使用其他種類的清洗劑時,請事先與本公司洽詢。

8.1.5 Fixatives and coating materials 固定劑和塗層劑

(a)Select the appropriate covering and sealant materials for onductive Conductive Polymer Aluminum Solid Capacitors. In particular,make sure the fixative, coating and thinner do not contain acetone.

(a)選擇適合於混合型導電性高分子電容器外裝材質和封裝材質的材料。特別是固定劑和塗層劑或稀釋劑中不得含有丙酮。

(b)Before applying a fixative or coating ,completely remove any flux residue and foreign matter form the area where the board and Conductive Polymer Hybrid Aluminum Electrolytic Capacitors will be jointed together.

(b)使用固定劑和塗層劑前,清除基板和混合型導電性高分子電容器封裝部之間的焊裝劑殘渣和污垢。

(c)Allow any detergent to dry before applying the fixative or coating.

(c)使用固定劑和塗層劑前,烘乾清洗劑等。

8.1.6 Fixatives and coating materials

(a)Mount after checking the capacitance and the rated voltage.

(a)先確認額定靜電容量和額定電壓後,再進行安裝。

(b)Do not drop Conductive Polymer Hybrid Aluminum Electrolytic Capacitors on the floor and do not use it that is dropped.

(b)小心操作,不要摔落。摔落的混合型導電性高分子電容器不得使用。

(c)Do not mount Conductive Polymer Hybrid Aluminum Electrolytic Capacitors that is deformed.

(c)安裝時不要使其變形。

(d)Do not break aluminum case surface Nylon in mounting

(d)安裝時不要破坏铝壳表面皮膜。

8.1.7 Reflow soldering 回流焊

(a)Soldering condition should be under the following ranges.

(a)請在以下焊接條件(溫度、時間)範圍內使用。

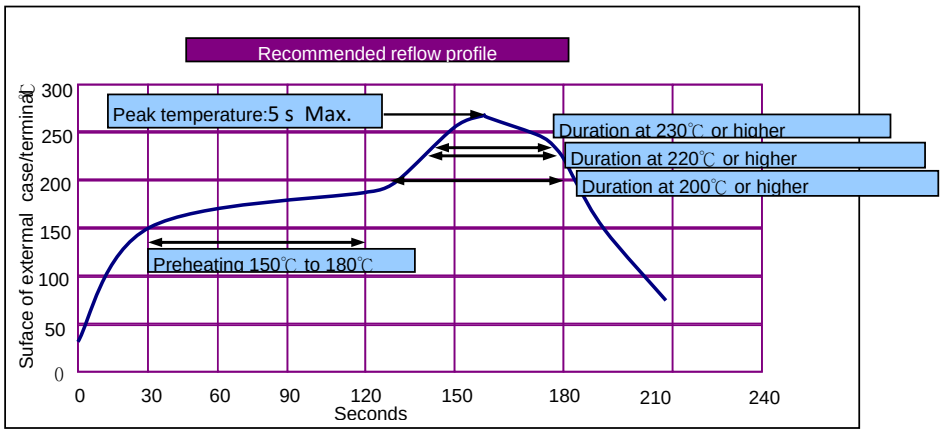

※All temperatures are measured on the topside of the Al-can and terminal surface.

※峰值溫度:電容器頂部及電極端子部的溫度。

Item (WV)	16~63	80~125
Peak Temperature	260℃ or less	250℃ or less
Preheating Temperature	150℃~180℃ 120 sec. max.	
Duration at 200℃ or higher	100 sec. max.	100 sec. max.
Duration at 220℃ or higher	80 sec. max.	80 sec. max.
Duration at 230℃ or higher	40 sec. max.	40 sec. max.
Reflow number	twice or less	twice or less

※Reflow should be performed twice or less.Please ensure that the capacitor became cold enough to the room temperature (5 to 35℃) before the second reflow.

※以上如需兩次回流焊，需在第一次回流焊後放置1小時以上讓部品恢復常溫（5~35℃）才可進行.

(b)Do not apply reflow soldering to Radial Lead type.

(b)插裝(DIP)型混合型導電性高分子電容器不適用於回流焊。

8.1.8 Handling after soldering(焊接後注意事項)

(a)Do not tilt, bend or twist the after it Conductive Polymer Hybrid Aluminum Electrolytic Capacitors.

不得傾斜，扳倒，扭曲混合型導電性高分子電容器

(b)Do not move the PCB with catching Conductive Polymer Hybrid Aluminum Electrolytic Capacitors itself.

不得直接抓取混合型導電性高分子電容器來移動基板

(c)When stacking PCBs,make sure that the Conductive Polymer Hybrid Aluminum Electrolytic Capacitors. Does not touch other PCBs or components.

堆放基板時,注意不要讓混合型導電性高分子電容器接觸基板或其他元件

(d)Do not dump the Conductive Polymer Hybrid Aluminum Electrolytic Capacitors with objects.

不得用力擺放以焊好高份子固態電容之線路板

8.1.9 Storage condition(儲存條件)

(1) Store Conductive Polymer Hybrid Aluminum Electrolytic Capacitors in a location free from direct contact salt spray or oil spray.

混合型導電性高分子電容器勿直接暴露於鹽霧或油霧之環境

(2) Store in a location where the Conductive Polymer Hybrid Aluminum Electrolytic Capacitors is not exposed to noxious gas as hydrogen sulfide,

混合型導電性高分子電容器儲存環境需避免有毒氣體

(3) Store at a temperature between 5 to 35℃ , with humidity of 75%RH or less.

儲存溫度5至35℃ ,相對濕度低於75%

(4) Store Conductive Polymer Hybrid Aluminum Electrolytic Capacitors in a location that is not subject to direct sunlight, vibration or contact with water.

混合型導電性高分子電容儲存環境須避免直接照光,振動及水氣接觸

(5) Conductive Polymer Hybrid Aluminum Electrolytic Capacitors sets the storage period to prevent the increaseof leakage current through the long-term storage before opening. When make a long-term storage,please storage its as follows.Open the bags just before mounting and use up all products once opened .For keeping a good solderability, store the Su'scon as follows.

混合型導電性高分子電容器為確保產品開封前長時間放置仍維持良好特性,因此設定了保存期限,產品開封後請盡快用完, 為使產品焊錫性良好請遵照以下保存期限使用.

※SMD TYPE產品 DIP TYPE產品

Before unseal : within 1 year after delivery 未開封 : 收到後一年內

Carrier Tape

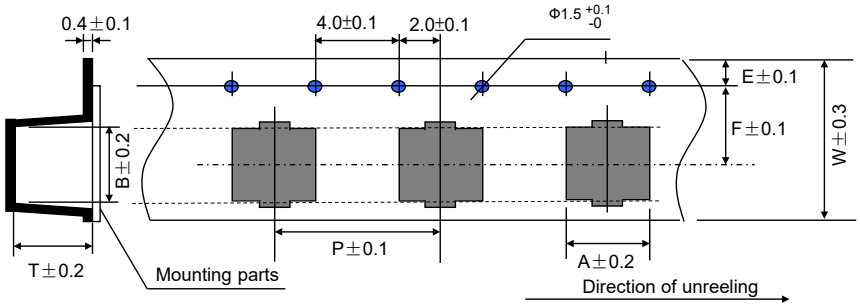

單位：mm

Size (ΦxL)	Item						
	A	B	W	F	E	P	T
5 x 6.0~7.0	5.7	5.7	12	5.5	1.75	12.0	7.5
6.3 x 4.2	7.0	7.0	16	7.5	1.75	12.0	4.5
6.3 x 4.5	7.0	7.0	16	7.5	1.75	12.0	4.8
6.3 x 5.7~6.0	7.0	7.0	16	7.5	1.75	12.0	6.5
6.3 x 6.0 (鋁殼L=6.8mm)	7.0	7.0	16	7.5	1.75	12.0	8.2
6.3 x 7.0	7.0	7.0	16	7.5	1.75	12.0	8.2
6.3 x 7.7	7.0	7.0	16	7.5	1.75	12.0	8.2
6.3 x 8.0	7.0	7.0	16	7.5	1.75	12.0	8.2
6.3 x 8.0 (鋁殼L=9.3mm)	7.0	7.0	16	7.5	1.75	12.0	9.3
6.3 x 9.5~10	7.0	7.0	16	7.5	1.75	12.0	10.0
8 x 7.0	8.7	8.7	24	11.5	1.75	16.0	8.8
8 x 9.5	8.7	8.7	24	11.5	1.75	16.0	11.0
8 x 10.5	8.7	8.7	24	11.5	1.75	16.0	11.0
8 x 12	8.7	8.7	24	11.5	1.75	16.0	13.0
10 x 8	10.7	10.7	24	11.5	1.75	16.0	8.5
10 x 10	10.7	10.7	24	11.5	1.75	16.0	11.0
10 x 10.5	10.7/11.4(G)	10.7/11.4(G)	24	11.5	1.75	16.0	11/11.4(G)
10 x 12.5	10.7	10.7	24	11.5	1.75	16.0	13或13.5
10 x 16.5	10.7	10.7	24	11.5	1.75	16.0	17.5

(G)" "Anti-vibration Structure"

Reel

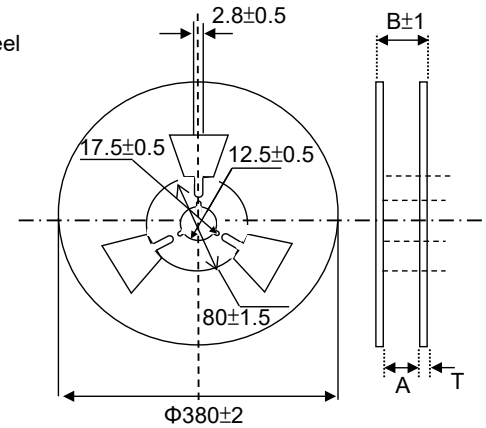

Polarity

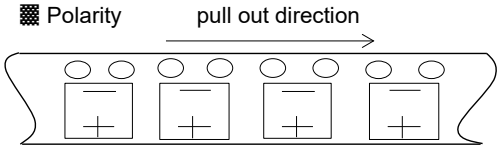

Sizecode (ΦxL)	A	B±1	T±0.5
5x6~7	14	18	2.0
6.3x6~10	18	22	
8x7~12	26	30	
10x8~17	26	30	

Size Code ΦDxL	A	B	Q'ty / Reel	Size of nner Box (L)x(W)x(H)	Size of Out Box (L)x(W)x(H)
5×6	14.0±1.0	18.0±1.0	1000pcs	385x385x106	412x403x255
6.3×(4.2~ 8)	18.0±1.0	22.0±1.0	1000pcs	385x385x125	412x403x293
6.3×(9.5)	18.0±1.0	22.0±1.0	800pcs	385x385x125	412x403x293
8×(7~ 10.5)	26.0±1.0	30.0±1.0	500pcs	385x385x106	412x403x255
10×(8~ 10.5)	26.0±1.0	30.0±1.0	500pcs	385x385x106	412x403x255
(8~ 10)×12.5	26.0±1.0	30.0±1.0	400pcs	385x385x106	412x403x255
10×16.5	26.0±1.0	30.0±1.0	300pcs	385x385x106	412x403x255

PACKAGE BOX

INNER BOX

Inner Box Size:

(L) X (W) X (H)

使用時注意事項:Precautions for users:

1.輕拿輕放 handle gently

2.取出托盤時,請用手托住紙盤底部,以免電容鬆散.

When take the tray out, pls support the bottom of the paper plate with your hands to avoid loose capacitors.