SHENG FENG

胜丰電子有限公司

APPROVAL SHEET

Customer:

Customer P/N: **SF 4007SM12**

Description: **DC FAN**

Model NO.: **SF 4007SM12**

Version.: **A** **Issue NO.:** **19SFH0128**

Issue date: **2019-01-28** **Quantity: 500PCS**

***Please sign back this specification for our record upon your approval.**

Thanks!

Company Stamp	CUSTOMER APPROVAL Stamp
制作：姚嵩梓	承认：
复核：吴国旗	核准：
核准：黄梓洪	日期：

1.0：一般规格（General Speci fication）

项目（Item）		规格/条件（Specification/Condition）	
1	型号(Mode1 No.)	SF 4007SM12	
2	外型尺寸(Outline. Dimension)	40*40*07	
3	工作电压（Operating Voltage）	DC 7.0-13.8V	
4	额定电压(Rated .voltage)	DC 12.0 V	
5	起动电压 Starting Voltage	DC ≤7.0V on/off	
6	额定电流(Rated current)	0.06A±10%	a. 额定电压(Rated .voltage) b.25℃ 65% RH c.After testing for 5 minutes
7	消耗功率(Power consumption)	0.72W	
8	转速（Speed）	4300±10%RPM	
9	最大风量：(Max Airflow)	3.14CFM	a. 额定电压(Rated .voltage) b. AMCA 标准（Standard） C. 额定电流(Rated current)
10	最大静压：(Air .Static Pressure)	0.84mmH2O	
11	最大噪音（Max Noise）	23.50 Db-A	a. 额定电压 (Rated Voltage) b. 18dB无响室 (18dB Non-Echo Chamber) c. 标准 (Standard):CNS 8753 / ISO 3744 d. Test Condition :ISO 7779 e. 距离 (Distance): 1.0 M
12	Life expectancy(期望寿命)	30000 hrs at temp25℃ Humidity5%-95%	MTTF (Mean Time To Failure) Conf. Level 90%)
13	扇叶数（No.of.Blade）	9 叶	
14	极数（No.of.Pole）	4 极	
15	运转方向（Rotating Direction）	逆时针/运转方向是从扇叶面看	

16	锁住保护 Lock Protection	□无 NO
17	自动启动保护 Auto Restar Protection	□无 NO
18	极性保护 Polarity Protection	□无 NO
19	恒速功能 fixed constant speed Function	□无 NO
20	FG 功能 FG function	□无 NO

2.0:主要材料/零件规格（Main Materials/parts Specification）

材料/零件（ Materials/parts ）		规格(Specification)	
1	塑料材料/扇叶 外框（Plastic Material/Blade,Housing）	PBT 黑色方框 9 叶 环保 HB	
2	轴承（Bearing Type）	含油轴承（Sleeve Bearing）	
3	引線（Lead Wire）	UL1007#26#140mm 红黑分线无端子，2.0 端子	
4	端子（Connector）	2.0 白色 2P	
		黑	红
		GND	VCC

3.0 電性規格（Electrical Specifically）有 YES 输出 FG 方波（齿型）反馈信号。

1	絕緣阻抗 Insulation Resistance	10MΩ/裸線与外框間測量，500VDC/min 10MΩ/between unshackled wire and frame at 500VDC/min
2	絕緣耐压 Dielectric Strength	5Ma Max./導線与外框間測量，500VAC/min 5Ma Max./Measured between lead wire(+)and frame at 500VAC/min
3	防水等级 Waterproof level	IP X0

4.0 环境测试（Environmental Specification）

1	运转温/湿度范围 Operating Temp .Range	温度/Temperature:-10℃ - +70℃ 湿度/Humidity:5% - 95%RH
2	保存温/湿度范围	温度/Temperature:-40℃ - +75℃

	Storage Temperature	湿度/Humidity:5% - 95%RH
3	耐湿性 Humidity	电气规格依据 MIL-STD 202F　Method 103B 湿度：95%RH　　温度：40±2℃
4	热冲击 Thermal Shock	电气规格依据 MIL-STD 202F　Method 107D Per MIL-STD 202F Method 107D,Condition D
5	绝缘阶段 Insulation Shock	UL: A 种 UL：Class A
6	包装耐振动试验 Packing Vibration Test	包装后，XYZ 三方向施 1.1G load　vibration test for 30min .No serious damage
7	包装耐冲击试验 Packing Shock Proof Test	捆包后，高 60 公分，1 棱角 3 边 6 面自然落下，无严重损坏. 1comer,3edges, 6faces natural drop from 60cm high packing No serious damage

5.0 在无响室额定电压下之噪音测试

(NOISE IS MEASURED AT RATED VOLTAGE IN ANECHOIC)

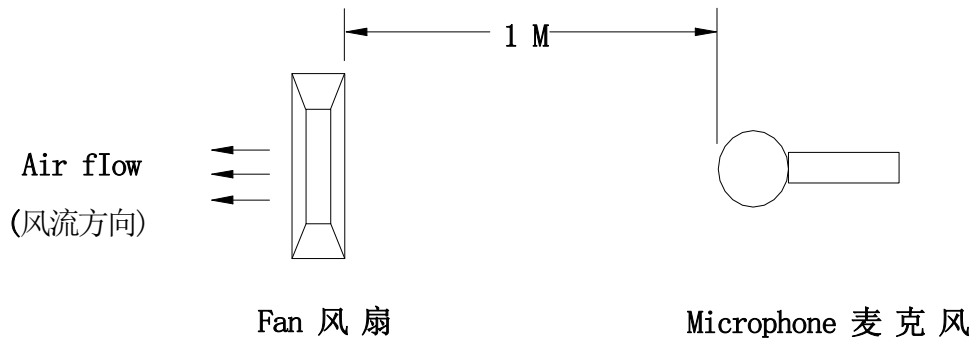

（在背景噪音不超过 18dB（A）的无响室内，将待测风扇通入额定的工作电压，悬掉入空中，将麦克风放于风扇同一平面且离待测风扇进风口一米处进行测试其 B&K 值）
Noise is measured rated voltage in free air in anechoic chamber with B&K sound level meter with microphone at a distance of one meter from the fan intake.The background noise is 18Db(A) max。

6.0 平均寿命说明（Life Expectancy Explanation）

在指定恒温下持续工作后，经检验，90%能正常运转即可估算其平均使用寿命（The continuous duty life at given temperature after which,90% of testing units shall still be running）。

Bearing System	Test Temperature	Test time (H)
Sleeve Bearing	25℃	30000

7.0 外 观 图 ：

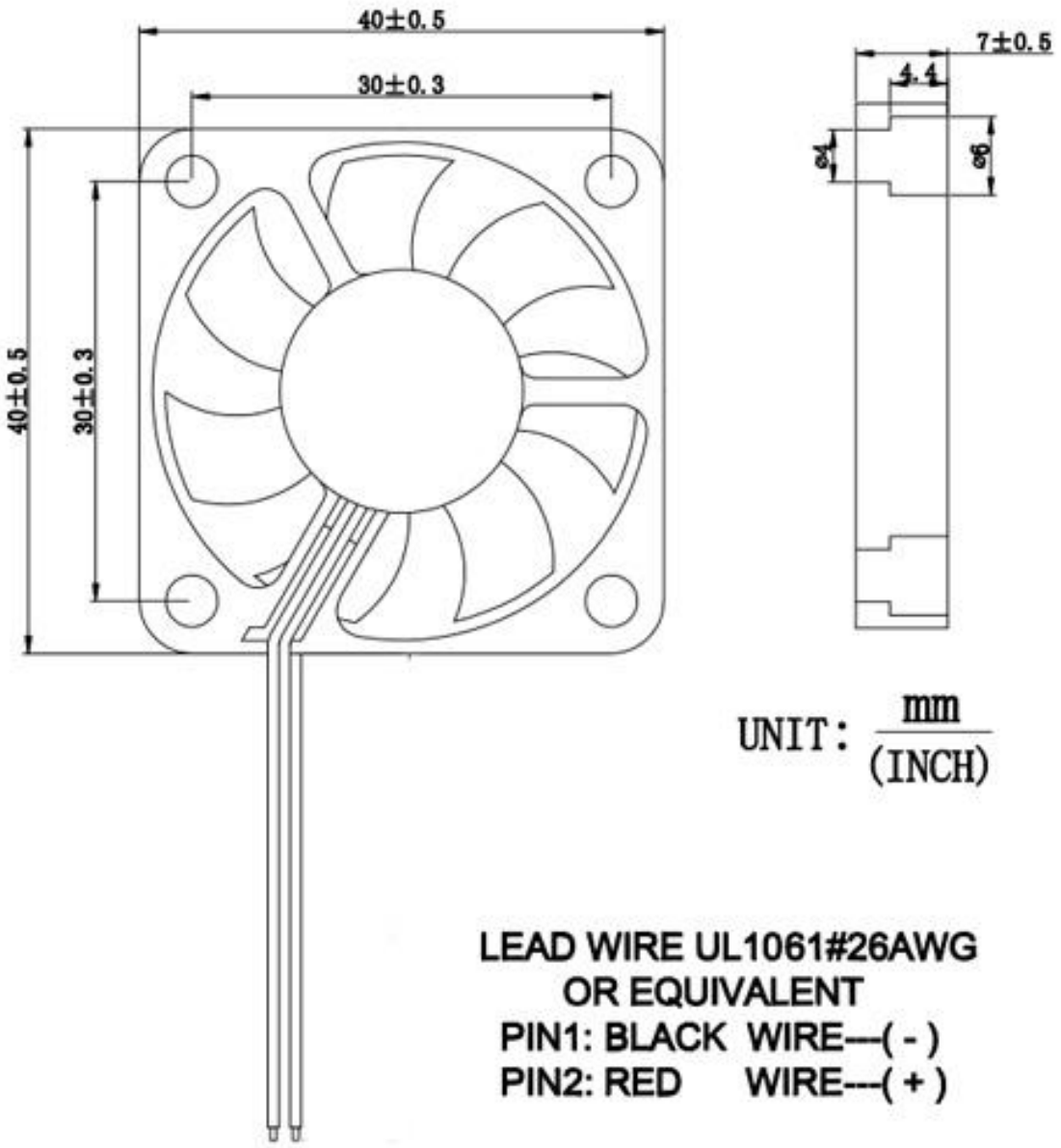

SHENG FENG

胜丰電子有限公司

SHENGFENG ELECTRONICS CO .,LTD

制图：陈卿伟

审核：陈惠

8-1. 使用时请勿超出本规定所规定之极限，否则我们不保证此产品

We, will nor guarantee the products if the application of our products are exceeded the limitation which isspecified on the specification

8-2. 倘若要变更此份文件任何规格，请务必事先提出要求

ln case of changes of the specification specified on thid document A WRITTEN NOTICEIS REQUESTED INADVANCE

8-3. 请勿触压着叶片以电源线缠绕着风扇或用力拉扯电源线，如此轴心与电源线将会被损坏

please do not touch the impeller with the pressure and never bring the fan with lead wire The bearing and lead wirenay be damaged

8-4. 本产品不保证因粉尘、水滴、小虫进入，而影响寿命与不良产生

No guarantee on the products against the safety problem or failure caused by powder dust,drop of water or insect

8-5. 如有任何资料及文件与此份资料不同，将以此份资料为主要参考

lf there is any data or related documentation different from this data sheet.This data sheet is the pr ciple reference

8-6. 请勿在可燃性气体与任何有害环境中使用

please do not use the fan in the environment of corrosive gas or liquid or any detrimental gas

8-7. 请于六个月内使用，否则风扇存放在很高温或很低温及湿度很高的室温中，风扇于六个月后将可能会有漏电流产生

piease do not store the fan in the environment of high/low temperarure,high humidity or detrimental gas.PIeasestore within six months,every six months,shall be a leakage of electric current to the fan,，even though the fan isstored in room temperature

8-8. 当风扇于运转转中，请勿企图将风扇锁死特别长的时间，如此，会因连续停止不转，产生高热而烧毁风扇

while the fan is in operarion,please do not lock the fan intentionally for a long period of time,since the continuousstoppage will result in overheat and thus burnt out the fan..

8-9. 组装风扇时，请特别注意，因共振或振动产生的噪音

During the installation of the fan， please pay sudstantial attention to possible notice caused by resonance vibrationand shock

8-10. 当搬运或作业中，风扇如从 60cm 的高底落下，将会对叶片的平衡产生若干影响，特别是滚珠轴承避免掉落

lt is very important to notify that avoid to drop fron 60cm height when in any movement or operation,it will impactthe balance ofblade.Especially ball bearing structure is avoided to drop down

8-11. 锁外壳之螺丝扭力不得超 4.6 kg -5.3 kg

The torque of the screw that locked the frame should not exceed 4.6kg-5.3kg

Shenzhen BCTC Testing Co., Ltd.
BCTC Building & 1-2F, East of B Building, Pengzhou Industrial, Fuyuan 1st Road, Qiaotou Community, Fuyong Street, Bao'an District, Shenzhen, China

Certificate of Compliance

Applicant : **SHENGFENGHONG ELECTRONICS CO.,LTD.**
No.1-2205 Yabao Rd., Bantian, Longgang Distict, Shenzhen, China

Manufacturer : **SHENGFENGHONG ELECTRONICS CO.,LTD.**
No.1-2205 Yabao Rd., Bantian, Longgang Distict, Shenzhen, China

Product : **Draught fan*cooling fan**

M/N : **12032 DC48V B2 BLOWER**
SFH12032, SFH1504, SFH1805, SFH2006, SFH2010, SFH2507, SFH2510, SFH3007, SFH3010, SFH3020, SFH3507, SFH3510, SFH4007, SFH4010, SFH4015, SFH4020, SFH4028, SFH4056, SFH5010, SFH5012, SFH5015, SFH5020, SFH5025, SFH6010, SFH6015, SFH6020, SFH6025, SFH6038, SFH7010, SFH7015, SFH7020, SFH7025, SHF7030, SFH7038, SFH7530, SFH8010, SFH8015, SFH8020, SFH8025, SFH8038, SFH9010, SFH9015, SFH9020, SFH9025, SFH9038, SFH9210, SFH9215, SFH9220, SFH9225, SFH9238, SFH10025, SFH11025, SFH12025, SFH12038, SFH14025, SFH14038, SFH15050, SFH16050, SFH17238, SFH17251, SFH18060, SFH20060, SFH22060, SFH25489

Test Standard : **EN 55032: 2015, EN 55035:2017**
EN 61000-3-2:2014, EN 61000-3-3:2013

Order No. / Report No. : **BCTC-LH180601620C/BCTC-LH180601620E**

The EUT described above has been tested according to the listed standards and found in compliance with the council EMC directive 2014/30/EU. The observations and test results referenced from this Certificate are relevant only to the sample tested. This Certificate is for the exclusive use of BCTC's Client and is provided pursuant to the agreement between BCTC and its Client. This Certificate is part of the full test report(s) and should be read in conjunction with it.

CE

Carson. Zheng
BCTC APPROVED SHENZHEN BCTC TESTING CO., LTD.
Manager
Jun. 27, 2018

This certificate of conformity is based on a single evaluation of the submitted sample(s) of the above mentioned product. It does not imply an assessment of the whole product and relevant. Directives have to be observed.

Tel: 400-788-9558 0755-33019988
Http://www.bctc-lab.com Http://www.bctc-lab.com.cn

Shenzhen BCTC Testing Co., Ltd.
BCTC Building & 1-2F, East of B Building, Pengzhou Industrial, Fuyuan 1st Road,
Qiaotou Community, Fuyong Street, Bao'an District, Shenzhen, China

Verification of Conformity

Certificate Number: BCTC-LH180601621C

We herewith confirm the following designated product:

Applicant : **SHENGFENGHONG ELECTRONICS CO.,LTD.**
No.1-2205 Yabao Rd., Bantian, Longgang Distict, Shenzhen, China

Manufacturer : **SHENGFENGHONG ELECTRONICS CO.,LTD.**
No.1-2205 Yabao Rd., Bantian, Longgang Distict, Shenzhen, China

Product : **Draught fan*cooling fan**
M/N : **12032 DC48V B2 BLOWER**
SFH12032, SFH1504, SFH1805, SFH2006, SFH2010, SFH2507, SFH2510, SFH3007, SFH3010, SFH3020, SFH3507, SFH3510, SFH4007, SFH4010, SFH4015, SFH4020, SFH4028, SFH4056, SFH5010, SFH5012, SFH5015, SFH5020, SFH5025, SFH6010, SFH6015, SFH6020, SFH6025, SFH6038, SFH7010, SFH7015, SFH7020, SFH7025, SHF7030, SFH7038, SFH7530, SFH8010, SFH8015, SFH8020, SFH8025, SFH8038, SFH9010, SFH9015, SFH9020, SFH9025, SFH9038, SFH9210, SFH9215, SFH9220, SFH9225, SFH9238, SFH10025, SFH11025, SFH12025, SFH12038, SFH14025, SFH14038, SFH15050, SFH16050, SFH17238, SFH17251, SFH18060, SFH20060, SFH22060, SFH25489

The submitted sample of the above equipment has been tested and found to comply with the following standards:

- **FCC Part 15, Subpart B**
- **ANSI C63.4: 2014**

This verification is part of the full test report(s) and should be read in conjunction with it. The referred Test report(s) show that the product complies with standard(s) recognized as giving presumption of compliance with the essential requirements in the specified FCC standard.
This Verification does not imply assessment of the production of the product.

Carson Zhang
Manager
Jun. 27, 2018

BCTC APPROVED SHENZHEN BCTC TESTING CO., LTD.

This certificate of conformity is based on a single evaluation of the submitted sample(s) of the above mentioned product. It does not imply an assessment of the whole product and relevant. Directives have to be observed.

Tel: 400-788-9558 0755-33019988
Http://www.bctc-lab.com Http://www.bctc-lab.com.cn