SHENG FENG

胜丰電子有限公司

APPROVAL SHEET

Customer:

Customer P/N: **SFS 2510SL5**

Description: **DC FAN**

Model NO.: **SFS 2510SL5**

Version.: **A** **Issue NO.:** **15SFH0105**

Issue date: **2015-01-05** **Quantity:** **3PCS**

***Please sign back this specification for our record upon your approval.**

Thanks!

Company Stamp	CUSTOMER APPROVAL Stamp
制作：郑家豪	承认：
复核：吴国旗	核准：
核准：陈惠	日期：

1.0：一般规格（General Speci fication）

项目（Item）		规格/条件（Specification/Condition）	
1	型号(Mode1 No.)	SFS 2510SL5	
2	外型尺寸(Outline. Dimension)	25*25*10	
3	工作電压（Operating Voltage）	DC 3.0-6.8V	
4	額定電压(Rated .voltage)	DC 5.0 V	
5	起动電压 Starting Voltage	DC ≤4V on/off	
6	額定電流(Rated current)	≤0.14A ±15%	a. 額定電压(Rated .voltage) b.25℃ 65% RH c. After testing for 5 minutes
7	消耗功率(Power consumption)	≤0.70W	
8	转速（Speed）	8500±15%RPM	
9	最大风量：(Max Airflow)	1.01CFM	a. 額定電压(Rated .voltage) b. AMCA 标准（Standard） C. 額定電流(Rated current)
10	最大静压：(Air .Static Pressure)	1.86mmH2O	
11	噪音标准（Noise Level）	≤17.8dB	a. 額定電壓 (Rated Voltage) b. 無響室 (Non-Echo Chamber) c. 標準 (Standard):CNS 8753 / ISO 3744 d. Test Condition :ISO 7779 e. 距離 (Distance): 1.0 M
12	Life expectancy(期望寿命)	25000Hrs 25℃	MTTF (Mean Time To Failure) Conf. Level 90%)
13	扇叶数（No.of.Blade）	5 叶	
14	极数（No.of.Pole）	4 极	
15	运转方向（Rotating Direction）	逆时针	
16	鎖住保護 Lock Protection	□无 NO	

17	极性保護 Polarity Protection	□无 NO
18	过压保护（Overvoltage protection）	□无 NO
19	过流保护（Overcurrent protection）	□无 NO
20	恒速功能 fixed constant speed Function	□无 NO

2.0:主要材料/零件规格（Main Materials/parts Specification）

材料/零件（ Materials/parts）		规格(Specification)	
1	塑料材料/扇叶 外框 （Plastic Material/Blade,Housing）	PBT 黑色方框 5 叶 ，环保 HB	
2	轴承（Bearing Type）	含油轴承（Sleeve Bearing）	
3	引線（Lead Wire）	框外 100MM 2pin2.0 正端	
4	端子（Connector）	黑(GND)	红(VCC)

3.0 電性規格（Electrical Specifically）

1	絕緣阻抗 Insulation Resistance	10MΩ/裸線与外框間測量，500VDC/min 10MΩ/between unshackled wire and frame at 500VDC/min
2	絕緣耐压 Dielectric Strength	5Ma Max./導線与外框間測量，500VAC/min 5Ma Max./Measured between lead wire(+)and frame at 500VAC/min
3	防水等级 Waterproof level	IP X0

4.0 环境测试（Environmental Specification）

1	運轉温/濕度范圍 Operating Temp .Range	溫度/Temperature:-10℃~+60℃ 濕度/Humidity:35%~85%RH
2	保存温/濕度范圍围 Storage Temperature	溫度/Temperature:-40℃~+70℃ 濕度/Humidity:35%~85%RH
3	耐濕性 Humidity	電气規格依据 MIL-STD 202F Method 103B 濕度：95%RH 溫度：40±2℃
4	熱冲擊 Thermal Shock	電气規格依据 MIL-STD 202F Method 107D Per MIL-STD 202F Method 107D,Condition D
5	絕緣階段 Insulation Shock	UL: A 种 UL：Class A

6	包裝耐振动試驗 Packing Vibration Test	包裝后，XYZ 三方向施 1.1G load vibration test for 30min .No serious damage
7	包裝耐冲擊試驗 Packing Shock Proof Test	捆包后，高 60 公分，1 棱角 3 边 6 面自然落下，無嚴重損坏. 1comer,3edges, 6faces natural drop from 60cm high packing No serious damage

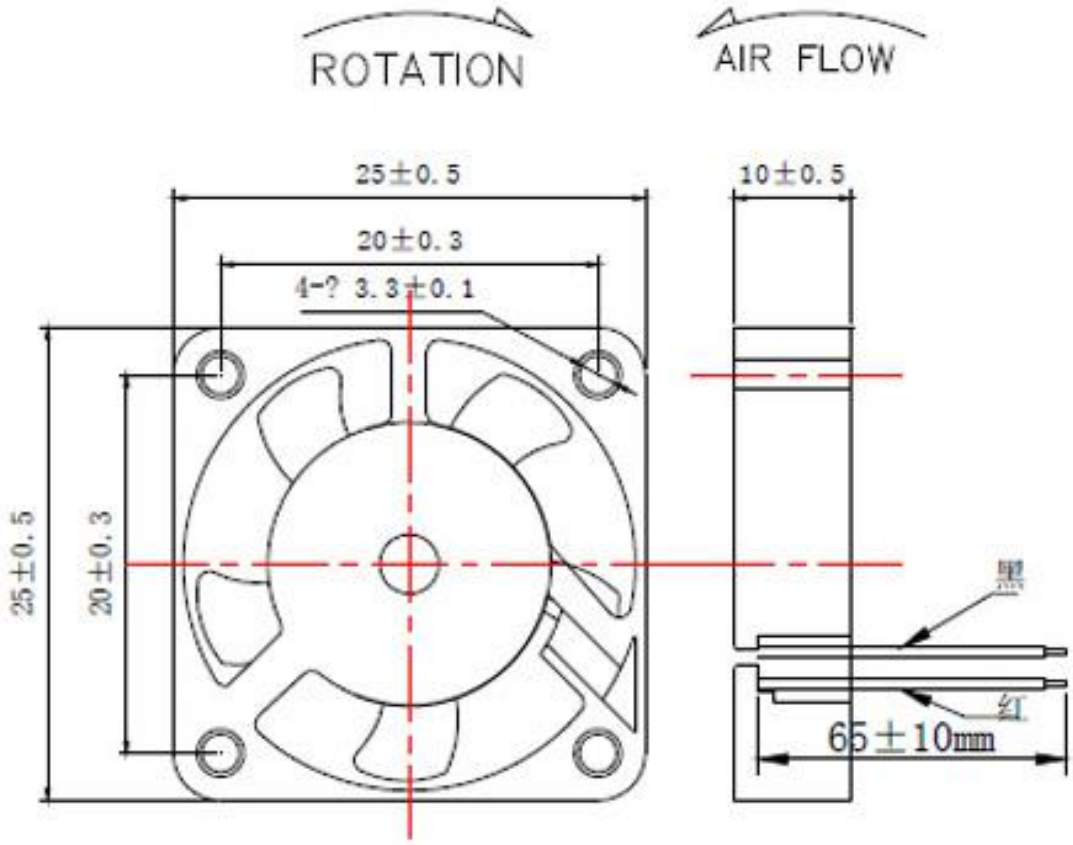

胜丰電子有限公司

SHENGFENG ELECTRONICS CO .,LTD

制图：陈卿伟

审核：陈惠

注意事项（NOTES）

1 Before use, make sure the supply voltage to meet the use of the product range, line-powered load exceeds the maximum power consumption of this product 120%. And the voltage is stable without clutter

（使用前，确认供电电压能满足本产品的使用范围，供电电路负载超过本产品的最大功耗的 120%。且电压是稳定不含杂波干扰）

2 Please when ventilator circular telegram normal work do not use the hand to bump touches fan blade border

（请在风扇通电正常运转时不要用手碰触扇叶边沿）

3 Please do not touch the impeller and never carry the fan the lead wires.The bearings and the lead wires may be damaged. Additionally, static electricity may damage the intemal ciruits of the fan

(请不要碰触扇叶和拉扯线材，以免损坏轴承及导线。此外,静电可能损坏内部的风扇元件)

4 Please do not use the fan in the environment of corrosive gas or liquid.

（请不要将风扇置于腐蚀的气体和液体内）

5 Please do not store the an in the environmet of high humidity.Please avoid storage of the fan over 6months.For long term storage, please connect power to the fan shortly every 6 months even through the fan is stored in room temperature.

（请不要将风扇储存在高湿度的环境中，请尽量避免将风扇储存期超过 6 个月。如果要长期储存，请将其在室温的环境下。且每隔 6 个月须上电源让风扇短时间运转。）

CERTIFICATE OF EMC COMPLIANCE

According to Directive: ***2004/108/EC***

Ref. No.: ***2012NT0507825***

Product:	Cooling Fan
Applicant:	Qingdao Shengfeng Electronics Co., Ltd.
Address:	Houjin Community, Xifu Town, Chengyang Area, Qingdao City, China
Manufacturer:	Qingdao Shengfeng Electronics Co., Ltd.
Address:	Houjin Community, Xifu Town, Chengyang Area, Qingdao City, China
Model:	Refer to attachment
Rating:	48V⎓, 0.75A

The test sample of product has been passed, the test according to requirements of the following standards:

Standard(s):	Test report(s) No.:
EN 55022:2010	NTEK-2012NT0507825E
EN 55024:2010	

Based on the voluntary assessment of the product sample and technical file, we confirm that the above-mentioned product meets the requirements of the EC directive.

The CE mark as show below can be used, under the responsibility of the manufacturer or the importer, after completion of an EC declaration of conformity and compliance with all relevant EC directives.

CE

Approved by/Date: _____ *May 11, 2012*

Department Manager

NTEK Testing Technology Co., Ltd.
Address: 1/F, Building E, Fenda Science Park, Sanwei Community, Xixiang Street, Bao' an District, Shenzhen P.R. China
Tel: (86)-0755-61156588 Fax: (86)-0755-61156599 Http: www.ntek.org.cn

VERIFICATION OF CONFORMITY

According to ***FCC part 15***

Ref. No.: ***2012NT0507826***

Product:	Cooling Fan
Applicant:	Qingdao Shengfeng Electronics Co., Ltd.
Address:	Houjin Community, Xifu Town, Chengyang Area, Qingdao City, China
Manufacturer:	Qingdao Shengfeng Electronics Co., Ltd.
Address:	Houjin Community, Xifu Town, Chengyang Area, Qingdao City, China
Model:	Refer to attachment
Rating:	48V⎓, 0.75A

The test sample of product has been passed, the test according to requirements of the following standards:

Standard(s):	Test report(s) No.:
CFR, Title 47 FCC Part 15: 2010	NTEK-2012NT0507826E

The Sample was tested to conform to the applicable FCC Rules and Regulations.The method of testing was in accordance to the most accurate measurement standards possible,and that all necessary steps have been enforced to assure that all production units of the same equipment will continue to comply with the Federal Comminications Commission's requirements.

Approved by/Date: Lovey *May 11, 2012*

Department Manager

NTEK Testing Technology Co., Ltd.
Address: 1/F, Building E, Fenda Science Park, Sanwei Community, Xixiang Street, Bao' an District, Shenzhen P.R. China
Tel: (86)-0755-61156588 Fax: (86)-0755-61156599 Http: www.ntek.org.cn

CERTIFICATE OF ROHS COMPLIANCE

According to Directive: ***2002/95/EC***

Ref. No.: ***2012NT0507827***

Product:	Cooling Fan
Applicant:	Qingdao Shengfeng Electronics Co., Ltd.
Address:	Houjin Community, Xifu Town, Chengyang Area, Qingdao City, China
Manufacturer:	Qingdao Shengfeng Electronics Co., Ltd.
Address:	Houjin Community, Xifu Town, Chengyang Area, Qingdao City, China
Model:	Refer to attachment

The test sample of product has been passed, the test according to requirements of the following standards:

Standard(s):	Test report(s) No.:
IEC 62321-2008	NTEK-2012NT0507827R

The Certificate of compliance is based on a test procedure or an evaluation of the above-mentioned product.This is to certify that the above-mentioned product is in compliance with the RoHs Directive (2002/95/EC) of the European parliament and commission Decision 2005/618/EC on the Restriction of the use of certain Hazardous Substances 「Lead (pb); Mercury (Hg); cadmium (cd); Hexavalent chromium (cr); polybrominated biphenyls (pBBs) and polybrominated diphenyl ethers (PBDEs)] in Electrical and Electronic equipment.

RoHS *Approved by/Date:* Bovey *May. 08, 2012*

Department Manager

NTEK Testing Technology Co., Ltd.
Address: 1/F, Building E, Fenda Science Park, Sanwei Community, Xixiang Street, Bao' an District, Shenzhen P.R. China
Tel: (86)-0755-61156588 Fax: (86)-0755-61156599 Http: www.ntek.org.cn