产品承认书
SPECIFICATION FOR APPROVAL

客户名称:
CUSTOMER

我司料号:
OUR PART NO. **XR2213A-820M**

我司品名:
OUR PART NAME **MOLDING POWER INDUCTORS**

送样日期:
DATE SAMPLES

数 量:
QUANTITY

制造确认 MANUFACTURER APPROVE		
拟制 DRAWN	审核 CHECKED	确认 APPROVED
HuFangting	RaoPin	Zhongcuilan

客户确认 CUSTOMER APPROVE

客户名称 CUSTOMER NAME:

客户料号 CUSTOMER P/N:

规格型号 DESCRIPTION: XR2213A 82uH ±20% 9.5A

检查結果: □ 合格 □不合格 签名及盖章:

INSPECT RESULT ACCEPT REJECT SIGNATURE AND STAMP

说明 REMARK:

如对本承认书内容有异议请提出或标记发送至我司，本承认书在未收到异议回复时于本承认书提供一周后生效。

If you have any objection to the contents of this acknowledgment, please raise it or send the mark to us. The acknowledgment will become effective one week after the acknowledgment is provided in the absence of any objection.

东莞市祥如电子有限公司

Dongguan xiangru electronics co., ltd

Tel：0769-86346548 Fax：0769-86346358

Email：dgxiangru@126.com

产品承认书
SPECIFICATION FOR APPROVAL

客户名称 CUSTOMER		日期 DATE	2025/9/10
客户物料编号 CUSTOMER P/N		客户规格型号 DESCRIPTION	XR2213A 82uH ±20% 9.5A
我司物料编号 OUR PART NO	XR2213A-820M	我司品名 OUR PART NAME	MOLDING POWER INDUCTORS

修订记录 Revision record

日期 Date	修改内容 Modify the content	审核 Checked	确认 Approved
2025/9/10	首次发行First issue	Zhongcuilan	Huangchuangen
2026/8/5	更新电流参数	Zhongcuilan	Huangchuangen

产品承认书
SPECIFICATION FOR APPROVAL

客户名称 CUSTOMER		日期 DATE	2025/9/10
客户物料编号 CUSTOMER P/N		客户规格型号 DESCRIPTION	XR2213A 82uH ±20% 9.5A
我司物料编号 OUR PART NO	XR2213A-820M	我司品名 OUR PART NAME	MOLDING POWER INDUCTORS

外观尺寸 Appearance of size
单位 Unit：mm

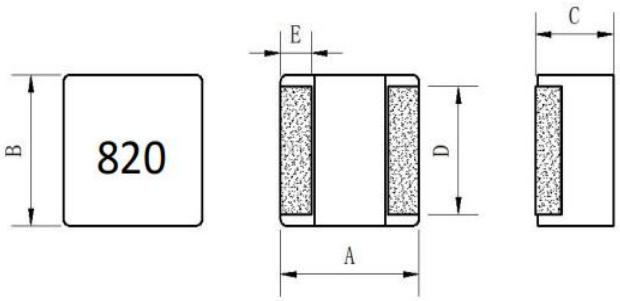

A	22.5±0.5	C	13.0 Max	E	
B	22.0±0.3	D	18.6±0.3	F	
标识Identification					

ELECTRICAL CHARACTERISTIC:

	L(μH) :	82 ±20% 100KHz 1.0V
	DCR(mΩ):	40.0 Max. 30.8 (Typ.) (@25℃)
	Isat(A):	9.5 (L9.5A/L0A*100%≈70%)
	INDUCTANCE Drop Approximately:	30% .@ IDC 9.5A
	Irms(A):	8.8 Typ.(ΔT)≦ 40℃

Use Frequency Range: 920 KHz (REF)	Self Resonant Feequency (REF) : 2.4 MHz (REF)

Operating Temperature Range: -55℃ ~+125℃

SCHEMATIC DRAWING

Equivaient Circuit

PCB PATTERN

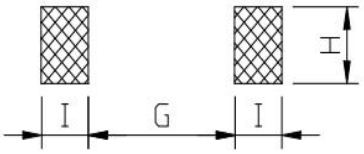

G : 11.5 m/m (REF)
H : 20.0 m/m (REF)
I : 6.4 m/m (REF)

MATERIAL LIST:

NO	ITEM	MATERIAL	SUPPLIER OF THE MATERIAL
1	CORE		
2	BLAK		
3	COPPER		
4	COATING		
5	MARKING		

产品承认书
SPECIFICATION FOR APPROVAL

客户名称 CUSTOMER		日期 DATE	2025/9/10
客户物料编号 CUSTOMER P/N		客户规格型号 DESCRIPTION	XR2213A 82uH ±20% 9.5A
我司物料编号 OUR PART NO	XR2213A-820M	我司品名 OUR PART NAME	MOLDING POWER INDUCTORS

TEST DATA

ELECTRICAL CHARACTERISTICS									
MEAS. ITEM	L(μH)	DCR(mΩ)	Isat(A)	A	B	C	D	E	
TEST FREQ.	100KHZ/1.0V	Max	100KHz 1.0V	m/m	m/m	m/m	m/m	m/m	
YOUR									
SPEC.	82±20%	40	9.5A≈70%	22.5±0.5	22.0±0.3	13.0 Max	18.6±0.3	5.0±0.4	
1	79.440	30.759	71.00%	22.64	22.01	12.61	18.49	5.11	
2	79.95	30.872	71.80%	22.65	21.95	12.75	18.48	5.08	
3	80.11	30.813	70.90%	22.72	22.03	12.79	18.52	5.05	
4	81.73	31.012	71.40%	22.71	21.92	12.81	18.61	5.13	
5	79.64	30.896	70.20%	22.69	22.04	12.74	18.49	5.06	
6	80.3	30.765	71.80%	22.66	21.9	12.69	18.48	5.07	
7	79.25	30.815	71.70%	22.73	22.01	12.75	18.54	5.18	
8	80.67	30.823	71.90%	22.71	21.94	12.8	18.51	5.1	
9	79.86	31.029	70.70%	22.69	21.92	12.76	18.49	5.05	
10	78.58	30.815	71.40%	22.66	21.91	12.78	18.51	5.08	
X	79.953	30.841	71.30%	22.686	21.963	12.748	18.512	5.091	
R	3.15	0.410	1.70%	0.09	0.14	0.2	0.13	0.13	

注意事项
Matters needing attention

客户名称 CUSTOMER		日期 DATE	2025/9/10
客户物料编号 CUSTOMER P/N		客户规格型号 DESCRIPTION	XR2213A 82uH ±20% 9.5A
我司物料编号 OUR PART NO	XR2213A-820M	我司品名 OUR PART NAME	MOLDING POWER INDUCTORS

TYPICAL ELECTRICAL CHARACTERISTICS

IDUCTANCE VS CURRENT@100KHZ/1.0V

IDC	0A	1A	2A	3A	4A	5A	6A	7A	8A	9A
L（μH）	82.92	81.12	79.86	78.24	76.48	74.56	72.56	69.77	67.53	65.00
△T(℃)	0	1.5	3.4	5.5	9.1	13.2	17.5	23.5	33	40.2

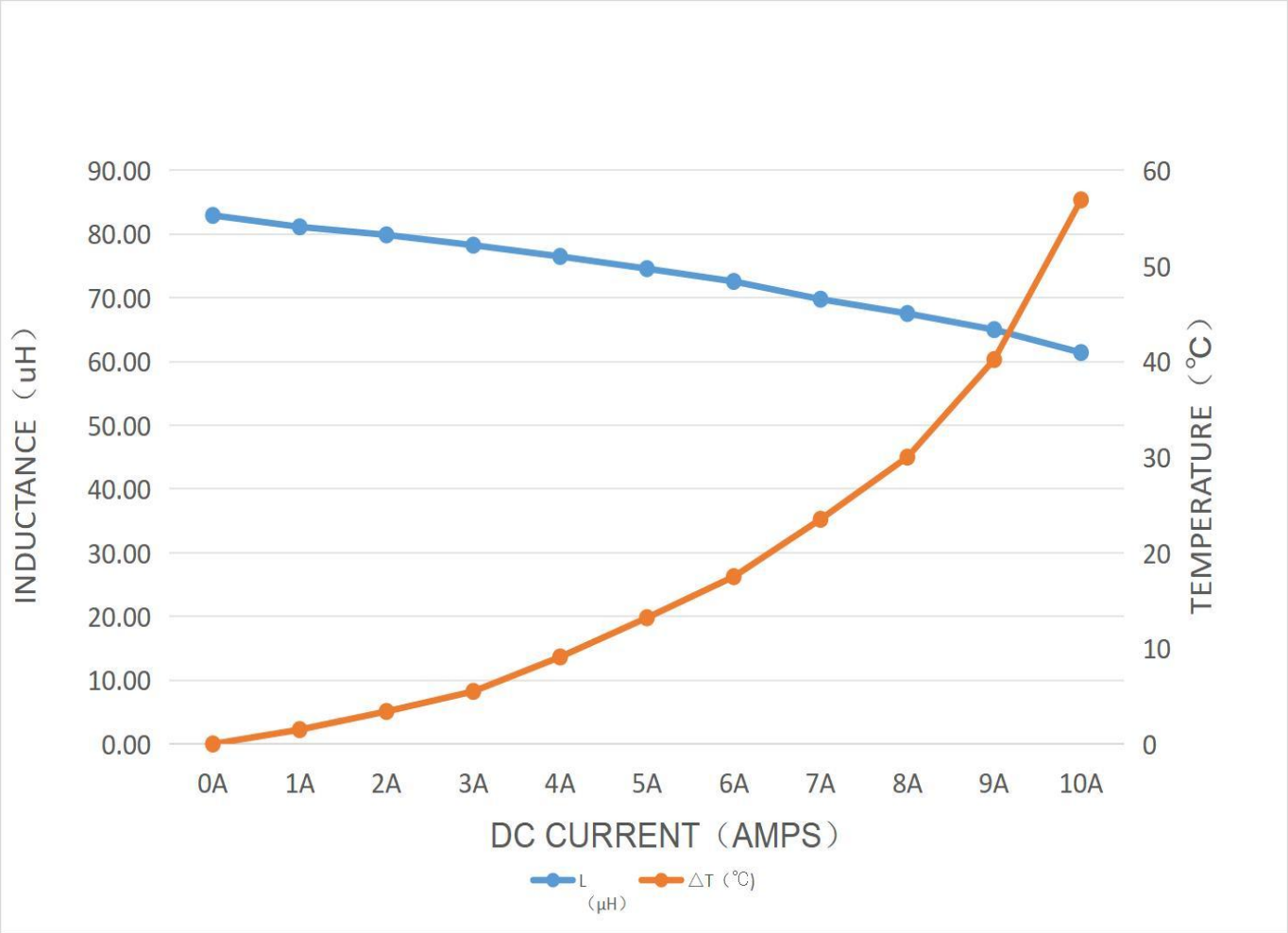

注意事项
Matters needing attention

客户名称 CUSTOMER		日期 DATE	2025/9/10
客户物料编号 CUSTOMER P/N		客户规格型号 DESCRIPTION	XR2213A 82uH ±20% 9.5A
我司物料编号 OUR PART NO	XR2213A-820M	我司品名 OUR PART NAME	MOLDING POWER INDUCTORS

L Frequency characteristics

Hz(KHz)	10	100	300	500	800	900	920	1000	1500	2500	2500			
L（μH）	82.12	80.71	81.57	84.18	92.63	96.03	97.4	100.7	154.13	429.63	-217.9			
		100%	101.70%	104.3%	114.8%	119.0%	120.7%	124.8%	191.0%	532.3%	-270.0%			

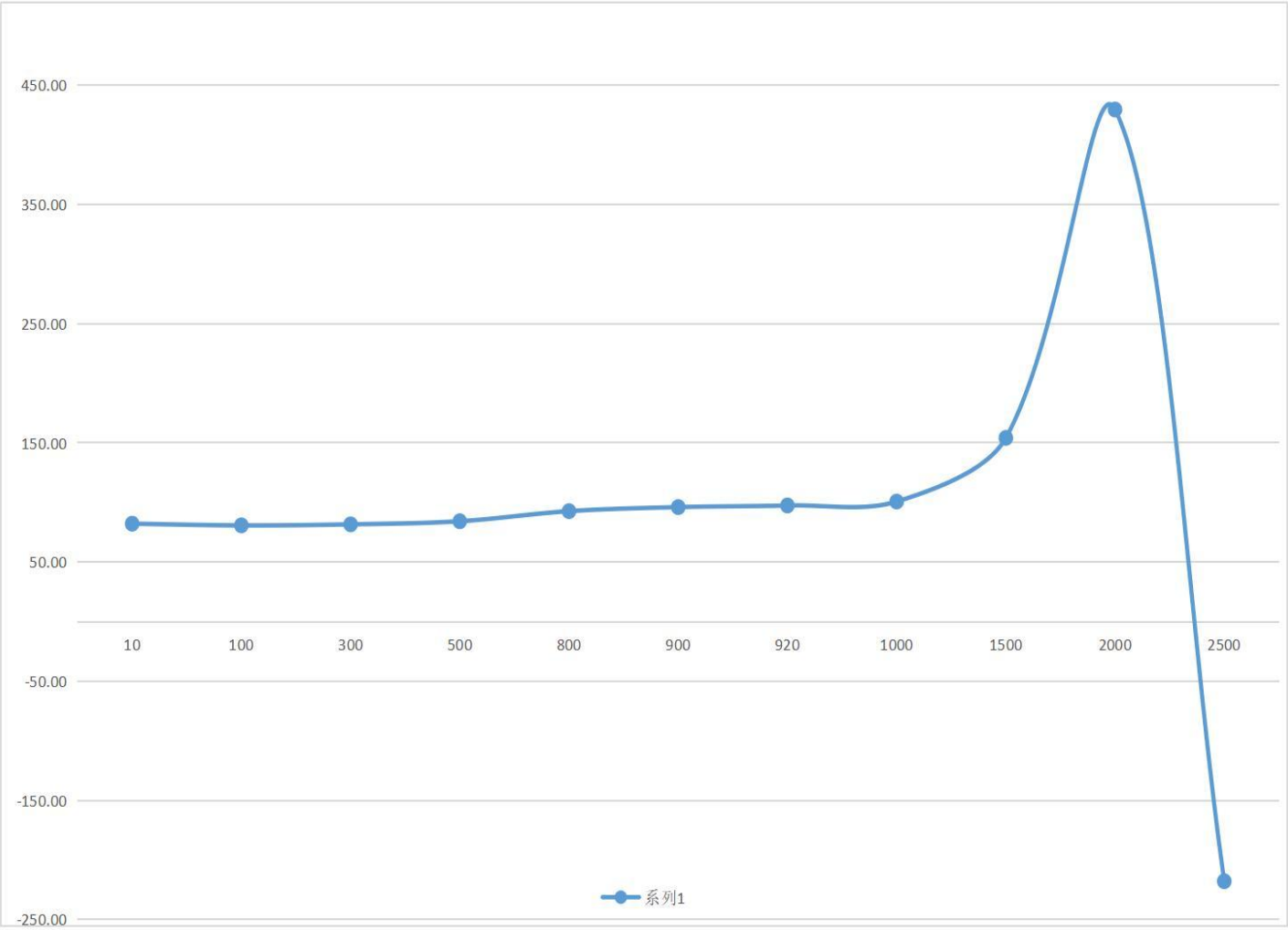

产品承认书
SPECIFICATION FOR APPROVAL

客户名称 CUSTOMER		日期 DATE	2025/9/10
客户物料编号 CUSTOMER P/N		客户规格型号 DESCRIPTION	XR2213A 82uH ±20% 9.5A
我司物料编号 OUR PART NO	XR2213A-820M	我司品名 OUR PART NAME	MOLDING POWER INDUCTORS

TEST ITEMS	SPECIFICATIONS	TEST CONDITIONS / TEST METHODS
ELECTRICAL PERFORMANCE TEST		
L	REFER TO STANDARD ELEC-TRICAL CHARACTERISTIC LIST.	MICROTEST6377
DCR		TH2511
RATED CURRENT		APPLIED THE CURRENT TO COILS THE IDUCTANCE CHANGE SHOULD BE LESS THAN 30% TO INITIAL VALUE AND TEMPERATURE RISE SHOULD NOT BE 40℃ TYPICAL
TEMPERATURERISE TEST	40℃ MAX (△t)	1. APPLIED THE ALLOWED DC CURRENT FOR 4 HOURS. 2. TEMPERATURE MEASURE BY DIGTAL SURFACE THERMOMETER.
OVER LOAD TEST	NO EVIDENCE OF ELECTRICAL DAMAGE	APPLIED 1.5 TIMES OF RATED ALLOWED DC CURRENT TO INDUCTORS FOR A PERIOD OF 5 MINUTES.
MECHANICAL PERFORMANCE TEST		
SOLDER HEAT RESISTANCE	1. INDUCTORS SHOULD HAVE NO EVIDENCE OF ELEC- TRICAL AND MICHANICAL DAMAGE 2. INDUCTANCE SHOULD NOT HANGE MORE THAN±10%	PREHEAT:150℃ 100s Max. SOLDER TEMPERATURE: 255±5℃ DIP TIME:10s Max. 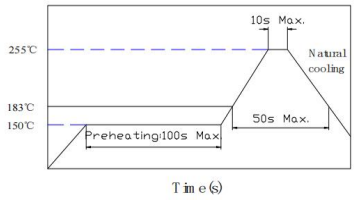
VIBRATION TEST (LOW FREQUENCY)		1.AMPLITUDE: 1.5 mm 2.FREQUENCY: 10-55-10HZ / 1 MIN 3.DIRECTION: X, Y, Z 4.DURATION: 2 HRS/X, Y, Z
SHOCK TEST		INDUCTORS SHOULD BE DROPPED 10 TIMES FROM A HEIGHT OF 1m ONTO 3cm WOODEN BOARD.

产品承认书
SPECIFICATION FOR APPROVAL

客户名称 CUSTOMER		日期 DATE	2025/9/10
客户物料编号 CUSTOMER P/N		客户规格型号 DESCRIPTION	XR2213A 82uH ±20% 9.5A
我司物料编号 OUR PART NO	XR2213A-820M	我司品名 OUR PART NAME	MOLDING POWER INDUCTORS

TEST ITEMS	SPECIFICATIONS	TEST CONDITIONS / TEST METHODS
MECHANICAL PERFORMANCE TEST		
SOLDERABILITY TEST	MORE THAN 90% OF TERMINAL ELECTRODE SHOULD BE COVERED WITH SOLDER.	PREHEAT:150℃ 120x SOLDER BATH AT 255±5℃ DIP TIME:10s Max. 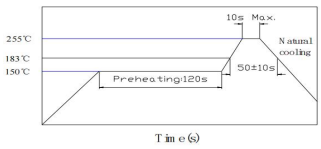
COMPONENT ADHESION (PUSH TEST)	1.5Kg Min	THE DEVICE SHOULD BE REFLOW SOLDERED (255±5℃ FOR 10 SECONDS) TO A TINNED COPPER SUBSTRATE. A DYNOMETER FORCE GAUGE SHOULD BE APPLIED TO THE SIDE OF THE COMPONENT. THE DEVICE MUST WITH- STAND A MINIMUM FORCE OF 1.5Kg WITHOUT AILURE OF THE TERMINATION . 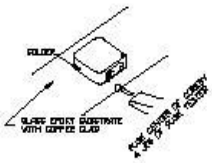
COMPONENT ADHESION (PULL TEST)	1.5Kg Min	1.INSERT 10cm WIRE INTO THE REMAINING OPEN EYE BEND THE ENDS OF EVEN WIRE LENGTHS UPWARD AND WIND TOGETHER 2. TERMINAL SHALL NOT BEREMARKABLY DAMAGED
FLEXTURE STRENGTH	THE FORCES APPLIED SHOULD NOT DAMAGE THE DIELECTRIC.	SOLDER A CHIP ON A TEST SUBSTRATE, BEND THE SUBSTRATE BY 2mm AND RETURN. 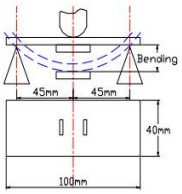
RESISTANCE TO SOLVENT TEST	THERE SHOULD BE NO CASEDEFORMATION, CHANGE IN APPEARANCE OR BITERATION OF MARKING	INDUCTERS SHALL WITHSTAND 6 MINTES OF ALCOHOL

产品承认书
SPECIFICATION FOR APPROVAL

客户名称 CUSTOMER		日期 DATE	2025/9/10
客户物料编号 CUSTOMER P/N		客户规格型号 DESCRIPTION	XR2213A 82uH ±20% 9.5A
我司物料编号 OUR PART NO	XR2213A-820M	我司品名 OUR PART NAME	MOLDING POWER INDUCTORS

TEST ITEMS	SPECIFICATIONS	TEST CONDITIONS / TEST METHODS
CLIMATIC TEST		
TEMPERATURE CHARACTERISTIC	1.APPEARANCE:NO DAMAGE 2.INDUCTANCE:WITHIN±10% OF INITIAL VALUE.	(-55℃ ~ +125℃)
HUMIDITY TEST		60℃±2℃ / 96±2 HOURS R.H:90-95%RH
LOW TEMPERATURE STORAGE		1.TEMPERATURE:-55℃±2℃ 2.TIME: 96±2 HOURS
THERMAL SHOCK TEST		1.-55±5℃ FOR 30 MINUTES. +125±5℃ FOR 30 MINUTES. 2.TOTAL: 10 CYCLES 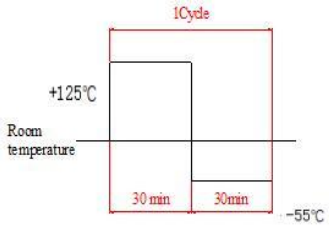
HIGH TEMPERATURE STORAGE		1.APPLIED CURRENT: MAX RATED CURRENT 2.TEMPERATURE:120 ℃±2℃
NOTE：INDUCTORS ARE TO BE TESTED AFTER 2 HOUR AT ROOM TEMPERATURE.		
LIFE TEST		
HIGH TEMPERATURE LOAD LIFE TEST	INDUCTORS SHOULD BE NO EVIDENCE OF SHORT OR OPEN CIRCUIT	1. TEMPERATURE: 125±2℃ 2. TIME: 500±12 HOURS 3. LOAD: ALLOWED DC CURREN
HUMIDITY LOAD LIFE TEST		1. TEMPERATURE: 60±2℃ 2. R.H.: 90-95% 3. TIME: 500±12 HOURS 4. LOAD: ALLOWED DC CURREN

产品承认书
SPECIFICATION FOR APPROVAL

客户名称 CUSTOMER		日期 DATE	2025/9/10
客户物料编号 CUSTOMER P/N		客户规格型号 DESCRIPTION	XR2213A 82uH ±20% 9.5A
我司物料编号 OUR PART NO	XR2213A-820M	我司品名 OUR PART NAME	MOLDING POWER INDUCTORS

REFLOW PROFILE

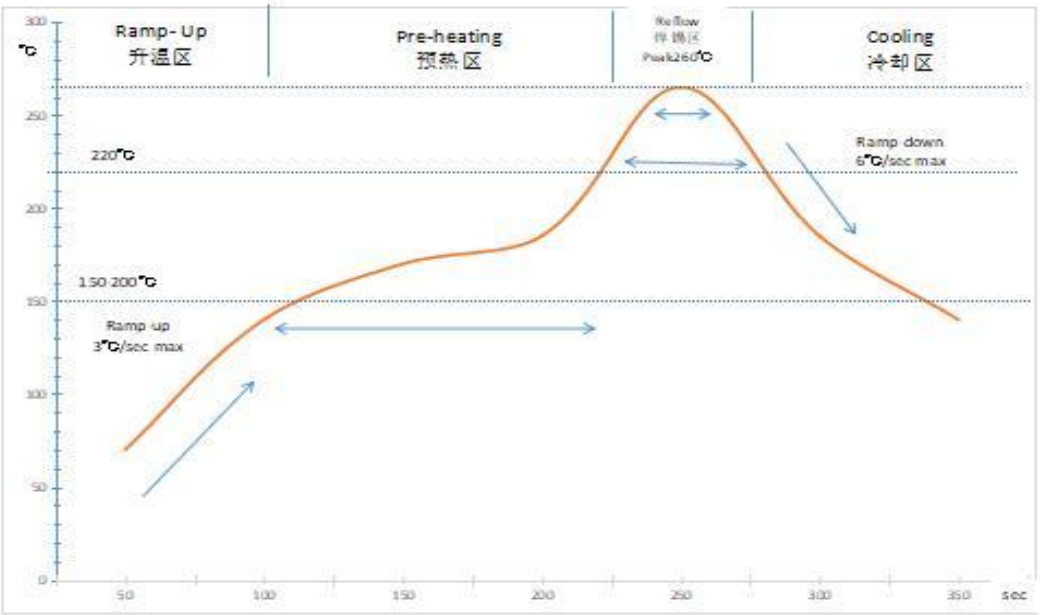

Lead-Free(LF)标准温度分析范围

项目 Item	升温区 Ramp-up	预热区 Pre-heating	焊锡区 Reflow	PeakTemp	冷却区 Cooling
温度范围 TeamScope	R.T.-150℃	150-200℃	220℃	260±5℃	6℃/sec Max
标准时间 Time spec	-	60-180 sec	60-150 sec	20-40 sec	-

Note:

1. Re-flow possibe times:within 2 time
2. Nitroge adopted is recommended while in re-flow

Iron Soldering Profile

Iro soldering power:Max.30W

Pre-heating:150℃/60sec

Soldering time:3sec.Max. Solder paste:Sn/3.0Ag/0.5Cu

Max.1 times for iron soldering

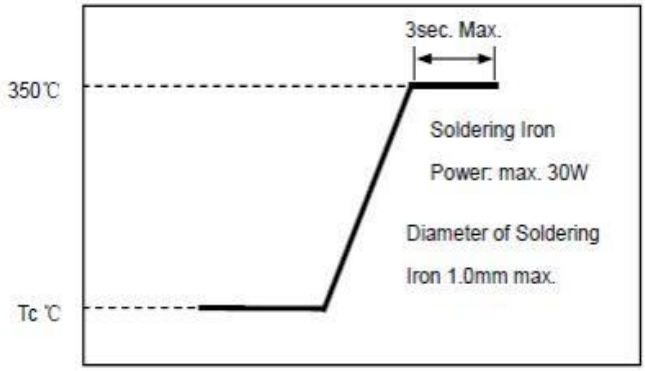

产品承认书
SPECIFICATION FOR APPROVAL

客户名称 CUSTOMER		日期 DATE	2025/9/10
客户物料编号 CUSTOMER P/N		客户规格型号 DESCRIPTION	XR2213A 82uH ±20% 9.5A
我司物料编号 OUR PART NO	XR2213A-820M	我司品名 OUR PART NAME	MOLDING POWER INDUCTORS

PackagingSpecification(卷轴尺寸)：

REEL DIMENSIONS

STYLE	REEL DIMENSIONS(m/m)						
	QTY(PCS)	A	B±0.8	C±0.5	G	N	T
2213	100	300	21	13	44.5	100	49

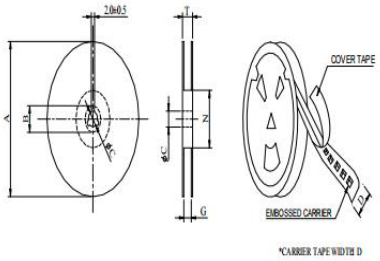

载带尺寸 Tape Dimension：

•载带尺寸，印字方向，印字内容的第一个字对定位孔 (如图所示)

word pair orifice of printed content (as shown) .

Tape size, printing direction,first

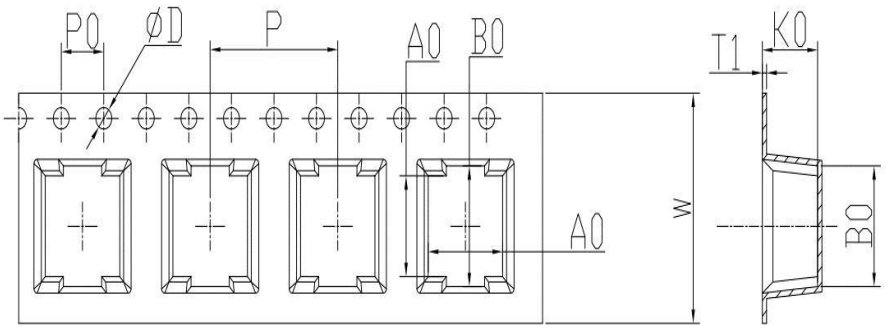

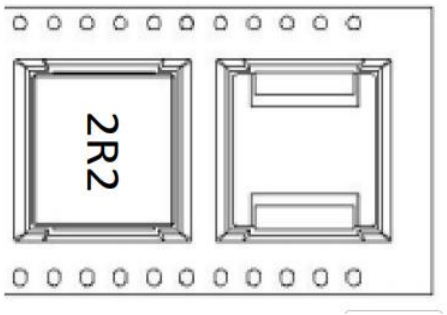

材质	下带颜色	上带颜色	后空格数 (PCS)	前空格数 (PCS)	封带方式(冷/热)	拉力(g)	W±0.3	A0±0.1	B0±0.1	K0±0.1	P±0.1	T1±0.1	F±0.1	E±0.1	ØD+0.1/-0	P0±0.1
透明 PS	透明	透明	13	13	冷	50-130	44	22.5	23	13.6	32	0.4	20.5	1.75	1.5	4

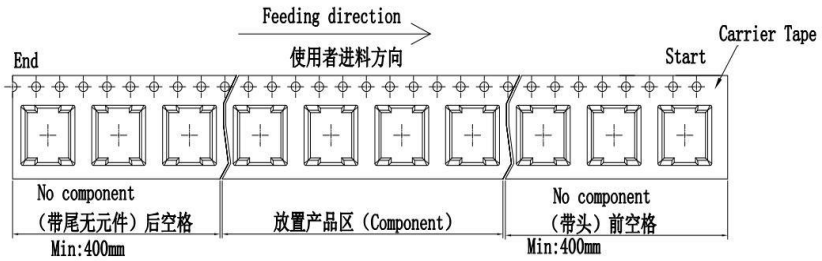

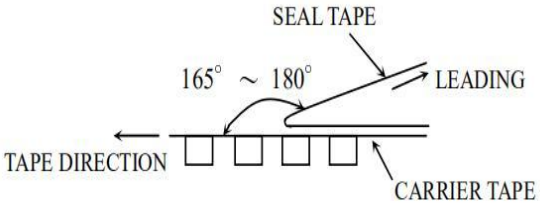

包装方法参照国际标准IEC 60286 -3：2013

Packaging is referred to the international standard IEC 60286 -3:2013

THE PEEL FORCE WITH A PEEL SPEED OF 300mm/MIN±10mm/MIN SHALL BE AS FOLLOWS: 0.1N TO 1.0N FOR AN 8mm TAPE WIDTH. 0.1N TO 1.3N FOR A 12mm～56mm TAPE WIDTH

产品承认书
SPECIFICATION FOR APPROVAL

客户名称 CUSTOMER		日期 DATE	2025/9/10
客户物料编号 CUSTOMER P/N		客户规格型号 DESCRIPTION	XR2213A 82uH ±20% 9.5A
我司物料编号 OUR PART NO	XR2213A-820M	我司品名 OUR PART NAME	MOLDING POWER INDUCTORS

PACKAGE：

卷轴包装数量
每卷 100 PCS

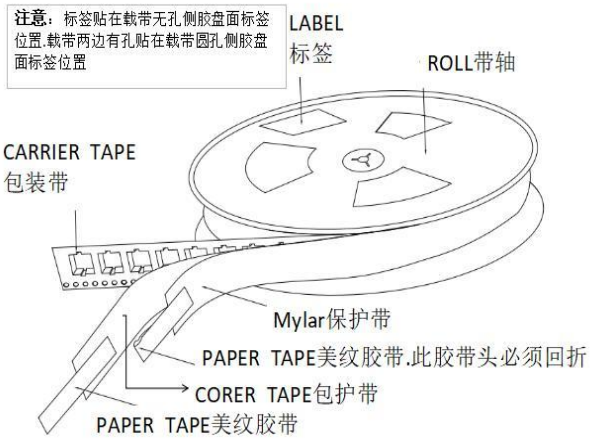

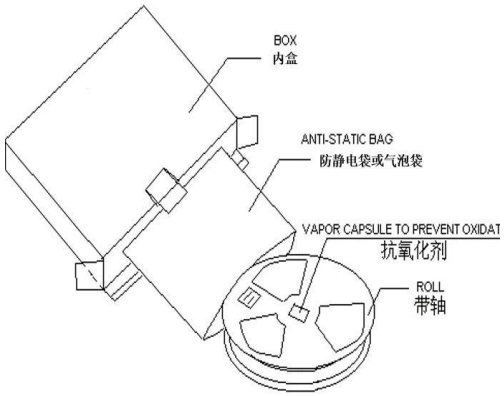

内盒包装数量
每盒 1 卷，共 100 PCS

Inner Box Dimension:34*34*6.5cm

外箱包装数量
每箱 2 盒，共 200 PCS

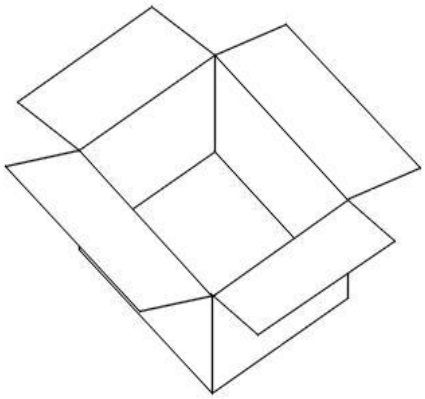

Carton Dimension: 36.5*35.5*14.5cm

Storage Conditions
***Temperature and humidity conditions: Less than 40℃ and 70% RH.**
***Recommended products should be used within 6 months form the time of delivery.**
***The packaging material should be kept where no chlorine or sulfur exists in the air.**

Transportation
***Products should be handled with care to avoid damage or contamination from perspiration and skin oils.**
***The use of tweezer or vacuum pick up is strongly recommended for individual components.**
***Bulk handing should ensure that abrasion and mechanical shock are minimized.**