REV.	ECN NO.	DESCRIPTION	DATE	DESIGN

Pb Process Capable

RoHS Compliant 2011/65/EU

HALOGEN Compliant Halogen Free

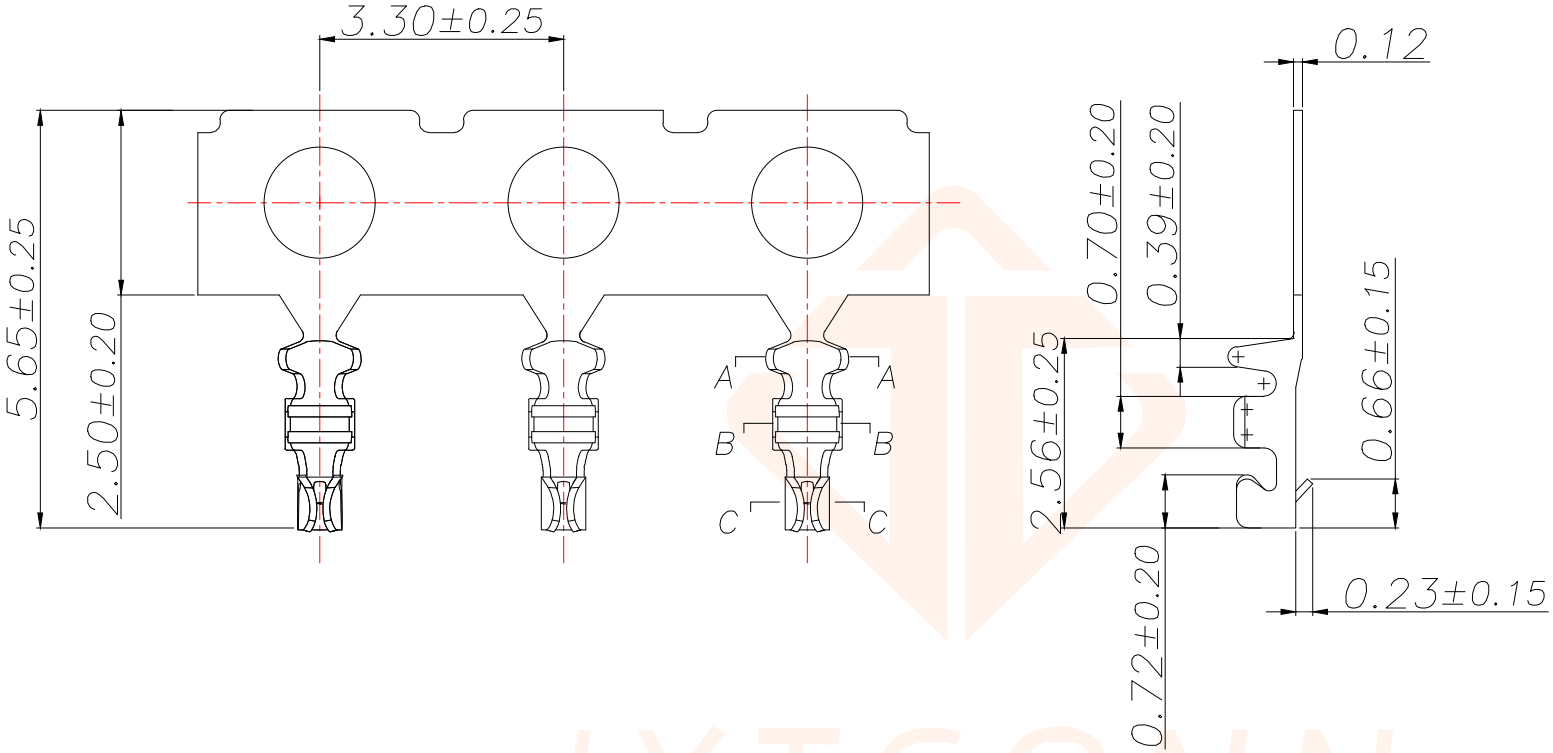

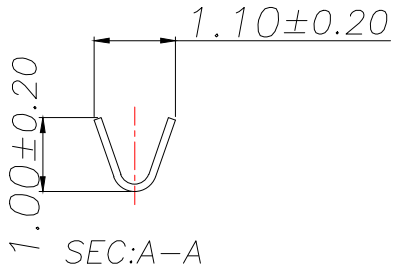

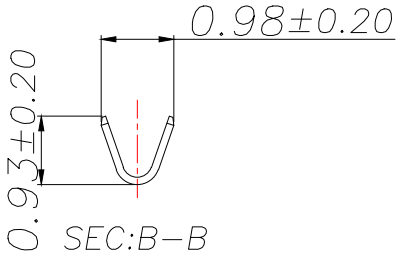

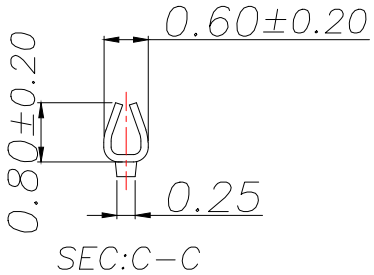

技术指标(Technical Index):

1.工作温度(Temperature range):-40°C~105°C.
2.额定电压(Rated voltage):30V AC/DC.
3.额定电流(Rated current):0.5A AC/DC.
4.接触电阻(Contact resistance):≤20mΩ.
5.耐压值(Dielectricwithstanding voltage):200V AC/minute.
6.绝缘电阻(Insulation resistance):≥100MΩ.
7.适用线规(Apply to gauge):AWG#28~#32(O.D0.6mm MAX).

序号	品名	材质
1	端子	Phosphor Bronze Bright tin plated

TOLERANCE		深圳聚兴泰电子科技有限公司 Shenzhen Juxingtai Electronic Technology Co., Ltd	
X.±0.50	±1°	PART NO. B-0.8-2DP2	TITLE: 0.80 Pitch C型WTB公头端子
X.X±0.20			
X.XX±0.10		DESIGN: Ethan	MANUFACTURE DWG
UNITS	mm		
MATERILA	———	CHED: Olvia	SCALE N:A / SHEET 1/1
FINISH	———	APPD: Ava	

JXTCONN