SHENG FENG

胜丰電子有限公司

APPROVAL SHEET

Customer:

Customer P/N: **SFS 3507B1M5**

Description: **DC FAN**

Model NO.: **SFS 3507B1M5**

Version.: **A** **Issue NO.:** **19SFH0329**

Issue date: **2019-03-29** **Quantity:3PCS**

***Please sign back this specification for our record upon your approval.**

Thanks!

Company Stamp	CUSTOMER APPROVAL Stamp
制作：田付安	承认：
复核：张楚辉	核准：
核准：姚嵩梓	日期：

1.0：一般规格（General Speci fication）

项目（Item）		规格/条件（Specification/Condition）	
1	型号(Mode1 No.)	SFS 3507B1M5	
2	外型尺寸(Outline. Dimension)	35*35*7	
3	工作电压（Operating Voltage）	DC 3.30-6.80V	
4	额定电压(Rated .voltage)	DC 5.0 V	
5	起动电压 Starting Voltage	DC ≤3.0V on/off	
6	额定电流(Rated current)	0.18A±10%	a. 额定电压(Rated .voltage) b.25℃ 65% RH c.After testing for 5 minutes
7	消耗功率(Power consumption)	0.90W	
8	转速（Speed）	6500±15%RPM	
9	最大风量：(Max Airflow)	3.38CFM	a. 额定电压(Rated .voltage) b. AMCA 标准（Standard） C. 额定电流(Rated current)
	最大静压：(Air .Static Pressure)	2.55mmH2O	
10	最大噪音（Max Noise）	Max:23.30Db-A	a. 额定电压 (Rated Voltage) b. 18dB无响室 (18dB Non-Echo Chamber) c. 标准 (Standard):CNS 8753 / ISO 3744 d. Test Condition :ISO 7779 e. 距离 (Distance): 1.0 M
11	Life expectancy(期望寿命)	40000 hrs at temp25℃ Humidity5%-95%	MTTF (Mean Time To Failure) Conf. Level 90%)
12	扇叶数（No.of.Blade）	9 叶	
13	极数（No.of.Pole）	4 极	

14	运转方向（Rotating Direction）	逆时针/运转方向是从扇叶面看
15	锁住保护 Lock Protection	有 YES 安规条件/Safety Condition
16	极性保护 Polarity Protection	□无 NO
17	过流保护（Over current protection）	□无 NO
18	恒速功能 fixed constant speed Function	□无 NO
19	FG 功能 FG function	□无 NO

2.0:主要材料/零件规格（Main Materials/parts Specification）

材料/零件（ Materials/parts）		规格(Specification)	
1	塑料材料/扇叶 外框（Plastic Material/Blade,Housing）	黑色方框 9 叶	
2	轴承（Bearing Type）	滚珠轴承（Ball Bearing）	
3	引線（Lead Wire）	UL1571#26#210MM 2.0 两 PIN	
4	端子（Connector）	红(VCC)	黑(GND)

3.0 電性規格（Electrical Specifically）

1	絕緣阻抗 Insulation Resistance	10MΩ/裸線与外框間測量，500VDC/min 10MΩ/between unshackled wire and frame at 500VDC/min
2	絕緣耐压 Dielectric Strength	5Ma Max./導線与外框間測量，500VAC/min 5Ma Max./Measured between lead wire(+)and frame at 500VAC/min
3	防水等级 Waterproof level	IP X0

4.0 环境测试（Environmental Specification）

1	运转温/湿度范围 Operating Temp .Range	温度/Temperature:-10℃ - +70℃ 湿度/Humidity:5% - 95%RH
2	保存温/湿度范围 Storage Temperature	温度/Temperature:-40℃ - +75℃ 湿度/Humidity:5% - 95%RH
3	耐湿性	电气规格依据 MIL-STD 202F Method 103B

	Humidity	湿度：95%RH　　温度：40±2℃
4	热冲击 Thermal Shock	电气规格依据 MIL-STD 202F　Method 107D Per MIL-STD 202F Method 107D,Condition D
5	绝缘阶段 Insulation Shock	UL: A 种 UL：Class A
6	包装耐振动试验 Packing Vibration Test	包装后，XYZ 三方向施 1.1G load　vibration test for 30min .No serious damage
7	包装耐冲击试验 Packing Shock Proof Test	捆包后，高 60 公分，1 棱角 3 边 6 面自然落下，无严重损坏. 1comer,3edges, 6faces natural drop from 60cm high packing No serious damage

5.0 在无响室额定电压下之噪音测试

(NOISE IS MEASURED AT RATED VOLTAGE IN ANECHOIC)

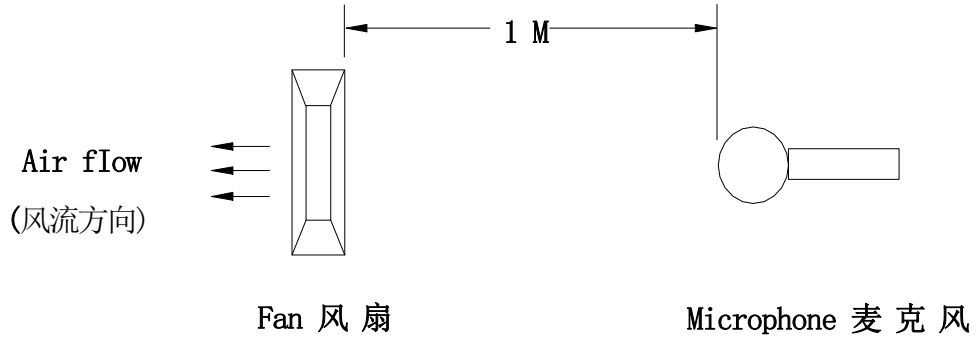

（在背景噪音不超过 18dB（A）的无响室内，将待测风扇通入额定的工作电压，悬掉入空中，将麦克风放于风扇同一平面且离待测风扇进风口一米处进行测试其 B&K 值）
Noise is measured rated voltage in free air in anechoic chamber with B&K sound level meter with microphone at a distance of one meter from the fan intake.The background noise is 18Db(A) max。

6.0 平均寿命说明（Life Expectancy Explanation）

在指定恒温下持续工作后，经检验，90%能正常运转即可估算其平均使用寿命（The continuous duty life at given temperature after which,90% of testing units shall still be running）。

Bearing System	Test Temperature	Test time (H)
ball Bearing	25℃	40000
ball Bearing	40℃	32000
ball Bearing	60℃	20000

7.0 外观图：

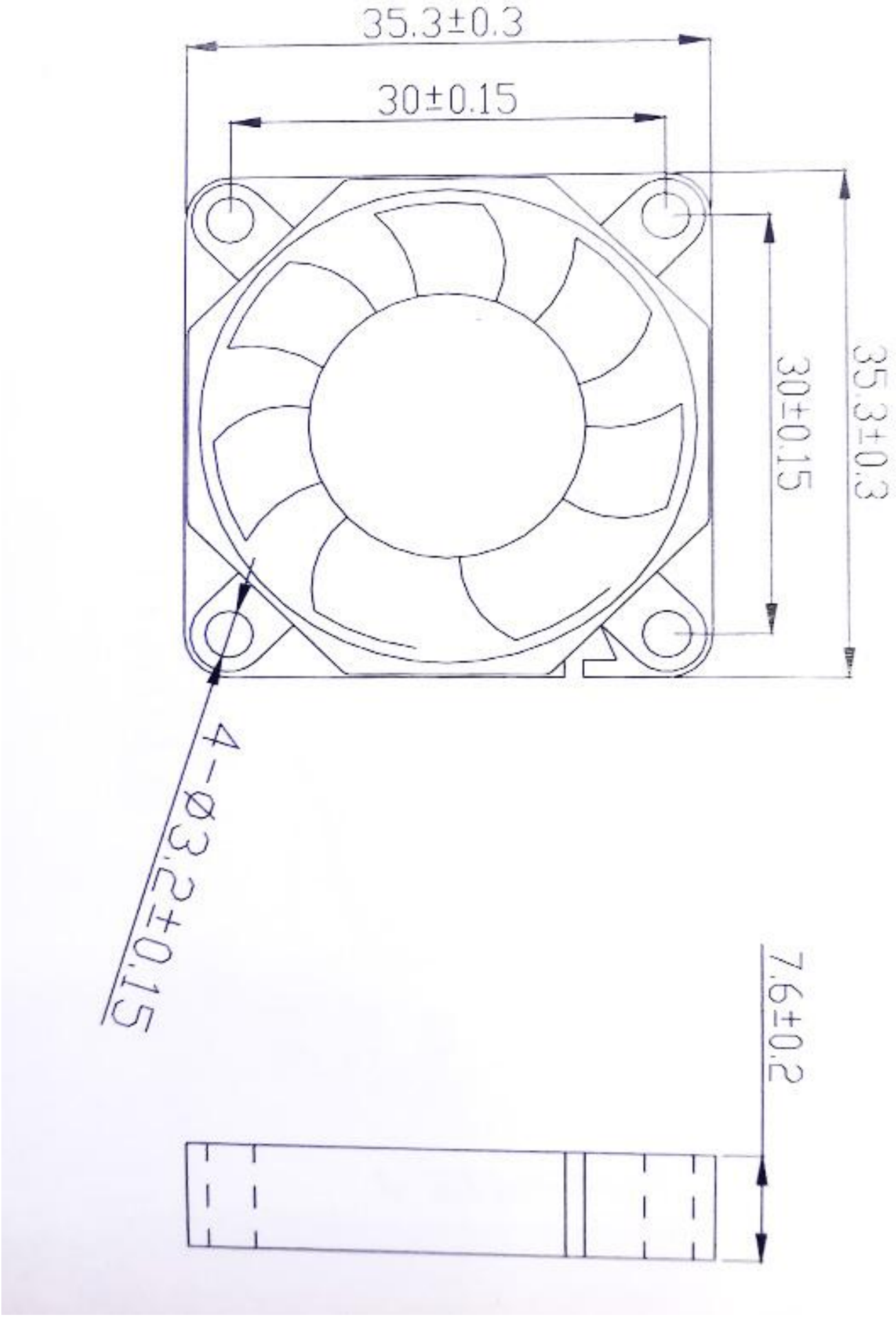
35.3±0.3
30±0.15
35.3±0.3
30±0.15
4-Ø3.2±0.15
7.6±0.2

8.0 功能描述

Functional description

8.1.PWM CONTROL SIGNAL PWM 控制信号:

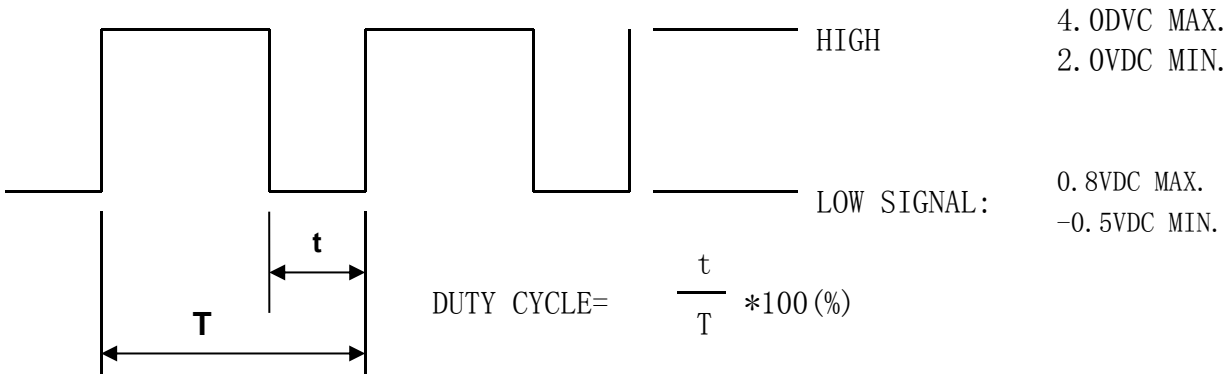

SIGNAL VOLTAGE RANGE 控制电压输入范围:-0.5～+4.0VDC

- THE FREQUENCY FOR CONTROL SIGNAL OF THE FAN SHALL BE ABLE TO ACCEPT 16K～32 KHZ.
- THE PREFERRED OPERATING POINT FOR THE FAN IS 25K HZ.
- AT 100% DUTY CYCLE,THE ROTOR WILL SPIN AT MAXIMUM SPEED.
- AT 0% DUTY CYCLE,THE ROTOR WILL STOP.
- WHEN CONTROL SIGNAL LEAD DISCINNECTED,THE FAN WILL MAXIMUM SPEED.
- AT 25K 3%～5% DUTY CYCLE,THE FAN WILL BE ABLE TO START FROM A DEAD STOP.
- THE FAN SPEED CONTROL IS CLOSED-LOOP.

8.2.PWM CONTROL LEAD WIRE INPUT IMPEDANCE:

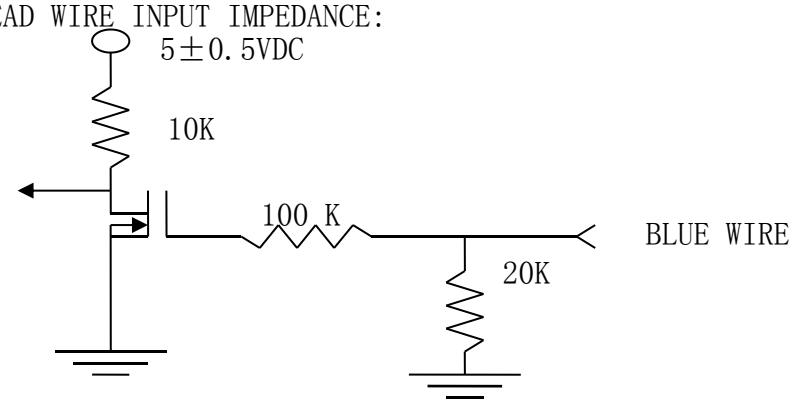

1. THE FAN SPEED WILL DEFAULT TO MAXIMUM WHEN THE SPEED CONTROL INPUT IS LEFT UNCON
2. ABSOLUTELY NO INTERNAL PULL-UP.NECTED.
3. PWM Diagram

9.0 转速反馈和报警信号反馈介绍

9.1 FG and RD Function Introduction

FG (Tach output type) Connection Diagram 转速反馈连接介绍

Fan with FG function will creat a square wave output. You can know fan speed by sensing the output wave Frequency. Most dc fan have four pole. So when fan run for one round, there will be two high level pulse. About other Multipole brushless fan, high level pulse will be different.

But please notice if you want to sense it’ s output wave, there is a external circuit. Please check the circuit Diagram below. There is no pull-up and VCC value limit. But please notice the Max Iin have to be small than 20mA.

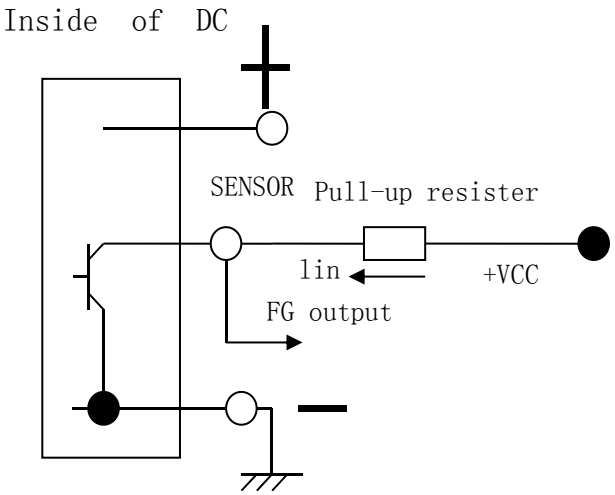

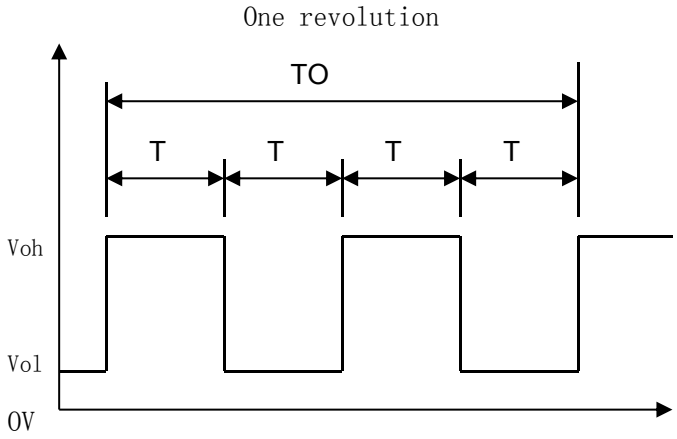

9.2 RD (Alarm output) connection Diagram 报警输出连接方式介绍

Some fan have RD extra function. There is a alarm signal output when fan stop work. Please notice there are Two kinds of signal output. Different customer will need different alarm type. Please check the diagram below. RD alarm input voltage3.3V. RD output current20MA

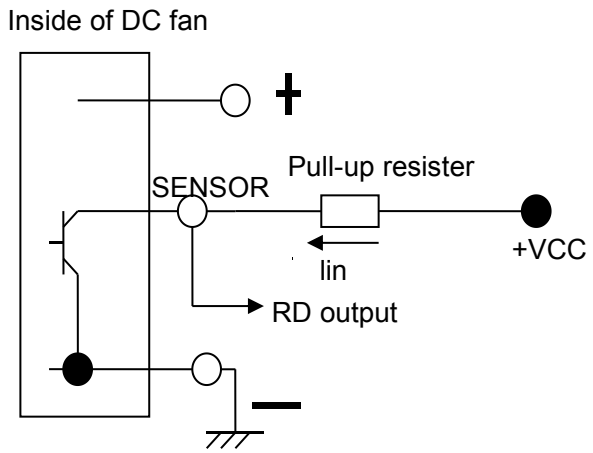

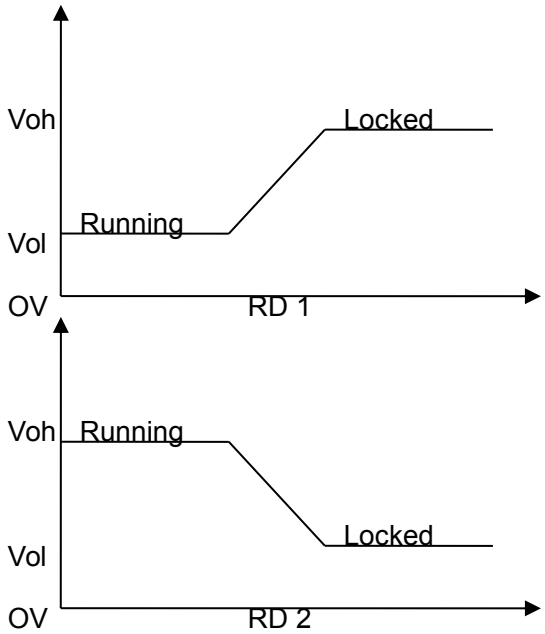

10.0 頻率測試方式（Frequency test mode）

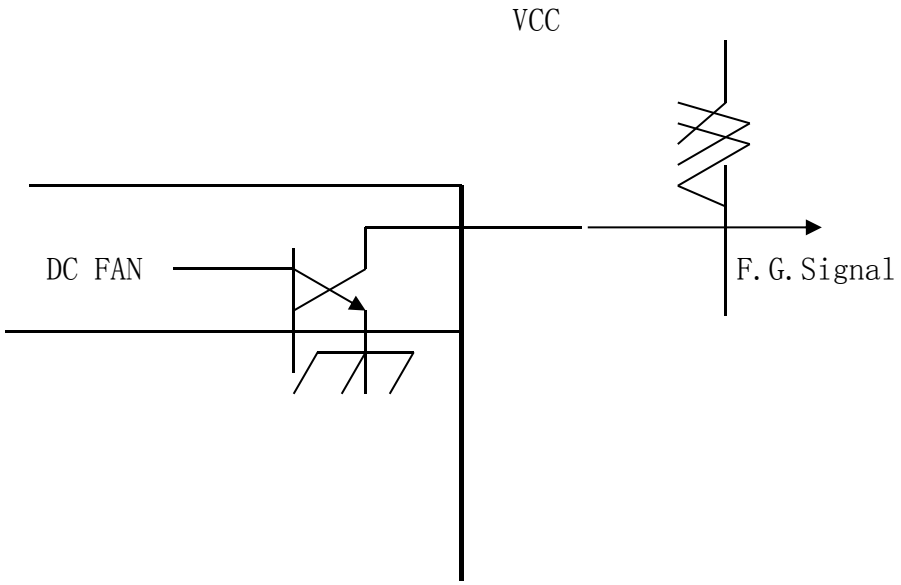

11.1 波形（Wave form）

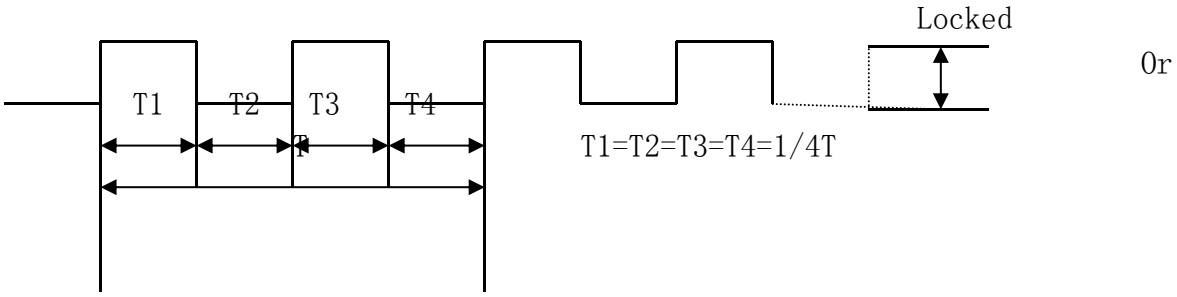

注意事项（NOTES）

1 Before use, make sure the supply voltage to meet the use of the product range, line-powered load exceeds the maximum power consumption of this product 120%. And the voltage is stable without clutter

（使用前，确认供电电压能满足本产品的使用范围，供电电路负载超过本产品的最大功耗的 120%。且电压是稳定不含杂波干扰）

2 Please when ventilator circular telegram normal work do not use the hand to bump touches fan blade border

（请在风扇通电正常运转时不要用手碰触扇叶边沿）

3 Please do not touch the impeller and never carry the fan the lead wires.The bearings and the lead wires may be damaged. Additionally, static electricity may damage the intemal ciruits of the fan

(请不要碰触扇叶和拉扯线材，以免损坏轴承及导线。此外,静电可能损坏内部的风扇元件)

4 Please do not use the fan in the environment of corrosive gas or liquid.

（请不要将风扇置于腐蚀的气体和液体内）

5 Please do not store the an in the environmet of high humidity.Please avoid storage of the fan over 6months.For long term storage, please connect power to the fan shortly every 6 months even through the fan is stored in room temperature.

（请不要将风扇储存在高湿度的环境中，请尽量避免将风扇储存期超过 6 个月。如果要长期储存，请将其在室温的环境下。且每隔 6 个月须上电源让风扇短时间运转。）

Shenzhen BCTC Testing Co., Ltd.
BCTC Building & 1-2F, East of B Building, Pengzhou Industrial, Fuyuan 1st Road,
Qiaotou Community, Fuyong Street, Bao'an District, Shenzhen, China

Certificate of Compliance

Applicant : **SHENGFENGHONG ELECTRONICS CO.,LTD.**
No.1-2205 Yabao Rd., Bantian, Longgang Distict, Shenzhen, China

Manufacturer : **SHENGFENGHONG ELECTRONICS CO.,LTD.**
No.1-2205 Yabao Rd., Bantian, Longgang Distict, Shenzhen, China

Product : **Draught fan*cooling fan**

M/N : **12032 DC48V B2 BLOWER**
SFH12032, SFH1504, SFH1805, SFH2006, SFH2010, SFH2507, SFH2510, SFH3007, SFH3010, SFH3020, SFH3507, SFH3510, SFH4007, SFH4010, SFH4015, SFH4020, SFH4028, SFH4056, SFH5010, SFH5012, SFH5015, SFH5020, SFH5025, SFH6010, SFH6015, SFH6020, SFH6025, SFH6038, SFH7010, SFH7015, SFH7020, SFH7025, SHF7030, SFH7038, SFH7530, SFH8010, SFH8015, SFH8020, SFH8025, SFH8038, SFH9010, SFH9015, SFH9020, SFH9025, SFH9038, SFH9210, SFH9215, SFH9220, SFH9225, SFH9238, SFH10025, SFH11025, SFH12025, SFH12038, SFH14025, SFH14038, SFH15050, SFH16050, SFH17238, SFH17251, SFH18060, SFH20060, SFH22060, SFH25489

Test Standard : **EN 55032: 2015, EN 55035:2017**
EN 61000-3-2:2014, EN 61000-3-3:2013

Order No. / Report No. : **BCTC-LH180601620C/BCTC-LH180601620E**

The EUT described above has been tested according to the listed standards and found in compliance with the council EMC directive 2014/30/EU. The observations and test results referenced from this Certificate are relevant only to the sample tested. This Certificate is for the exclusive use of BCTC's Client and is provided pursuant to the agreement between BCTC and its Client. This Certificate is part of the full test report(s) and should be read in conjunction with it.

CE

Carson. Zheng
BCTC APPROVED
SHENZHEN BCTC TESTING CO., LTD.
Manager
Jun. 27, 2018

This certificate of conformity is based on a single evaluation of the submitted sample(s) of the above mentioned product. It does not imply an assessment of the whole product and relevant. Directives have to be observed.

Tel: 400-788-9558 0755-33019988
Http://www.bctc-lab.com Http://www.bctc-lab.com.cn

Shenzhen BCTC Testing Co., Ltd.
BCTC Building & 1-2F, East of B Building, Pengzhou Industrial, Fuyuan 1st Road,
Qiaotou Community, Fuyong Street, Bao'an District, Shenzhen, China

Verification of Conformity

Certificate Number: BCTC-LH180601621C

We herewith confirm the following designated product:

Applicant : **SHENGFENGHONG ELECTRONICS CO.,LTD.**
No.1-2205 Yabao Rd., Bantian, Longgang Distict, Shenzhen, China

Manufacturer : **SHENGFENGHONG ELECTRONICS CO.,LTD.**
No.1-2205 Yabao Rd., Bantian, Longgang Distict, Shenzhen, China

Product : **Draught fan*cooling fan**
M/N : **12032 DC48V B2 BLOWER**
SFH12032, SFH1504, SFH1805, SFH2006, SFH2010, SFH2507, SFH2510, SFH3007, SFH3010, SFH3020, SFH3507, SFH3510, SFH4007, SFH4010, SFH4015, SFH4020, SFH4028, SFH4056, SFH5010, SFH5012, SFH5015, SFH5020, SFH5025, SFH6010, SFH6015, SFH6020, SFH6025, SFH6038, SFH7010, SFH7015, SFH7020, SFH7025, SHF7030, SFH7038, SFH7530, SFH8010, SFH8015, SFH8020, SFH8025, SFH8038, SFH9010, SFH9015, SFH9020, SFH9025, SFH9038, SFH9210, SFH9215, SFH9220, SFH9225, SFH9238, SFH10025, SFH11025, SFH12025, SFH12038, SFH14025, SFH14038, SFH15050, SFH16050, SFH17238, SFH17251, SFH18060, SFH20060, SFH22060, SFH25489

The submitted sample of the above equipment has been tested and found to comply with the following standards:

- **FCC Part 15, Subpart B**
- **ANSI C63.4: 2014**

This verification is part of the full test report(s) and should be read in conjunction with it. The referred Test report(s) show that the product complies with standard(s) recognized as giving presumption of compliance with the essential requirements in the specified FCC standard.
This Verification does not imply assessment of the production of the product.

Carson Zhang
Manager
Jun. 27, 2018

BCTC APPROVED SHENZHEN BCTC TESTING CO., LTD.

This certificate of conformity is based on a single evaluation of the submitted sample(s) of the above mentioned product. It does not imply an assessment of the whole product and relevant. Directives have to be observed.

Tel: 400-788-9558 0755-33019988
Http://www.bctc-lab.com Http://www.bctc-lab.com.cn