NSR330, NSR331, NSR332 series
40-V, 300-mA, Low Quiescent Current, Automotive Low-Dropout Regulator
Datasheet (EN) 1.0

Product Overview

NSR330, NSR331 and NSR332 series are 300 mA low-dropout linear regulator designed for battery-direct-connection automotive applications. Wide supply voltage range from 3 V to 40 V makes the series a good fit for severe operating conditions including load dump, cold cranking and start-stop.

With 5 µA quiescent current at light loads, NSR330, NSR331 and NSR332 series are quite suitable for always-on automotive applications where standby power consumption is strictly restricted.

With integrated compensation implementation, NSR330, NSR331 and NSR332 series can be stable with low-ESR (1 mΩ to 3 Ω) ceramic output capacitor, ranging from 1 µF to 200 µF.

The device features integrated short-circuit-to-GND and thermal shutdown protections. This device operates in ambient temperatures from –40 °C to 125 °C.

Key Features

- AEC-Q100 Qualified (Grade 1) for Automotive Applications
- 3 V to 40 V Wide Supply Voltage Range
- Output Current Range: Up to 300 mA
- Low Quiescent Current:
  - 200 nA (Typ.) Shutdown Current when EN low
  - 5 µA (Typ.) at No Loads
- Low Dropout Voltage: 320 mV at 300 mA Load / 5 V Vout
- Low ESR Ceramic Output Stability Capacitor (1 µF – 200 µF)
- Integrated Power-On-Reset with Adjustable Delay Time (NSR331 series Only)
- Integrated Fault Protection:
  - Short-Circuit-to-GND protection
  - Thermal Shutdown
- RoHs & REACH compliance

Applications

- Infotainment
- Power Train
- Cluster
- Body Control Module
- Battery Connected Always-On System

Device Information

Part Number	*Version Info*	*Package*
NSR33001-Q1	Adjustable output	HMSOP8
NSR330XX-Q1	XX: 25/33/50 – 2.5 V / 3.3 V / 5 V fixed	HMSOP8
NSR33101-Q1	PG/DLY, Adjustable output	HMSOP8
NSR331XX-Q1	PG/DLY, XX: 25/33/50 – 2.5 V / 3.3 V / 5 V fixed	HMSOP8
NSR33201-Q1	PG, Adjustable output	HSOP8
NSR332XX-Q1	PG, XX: 33/50 - 3.3 V / 5 V fixed	HSOP8

Typical Application

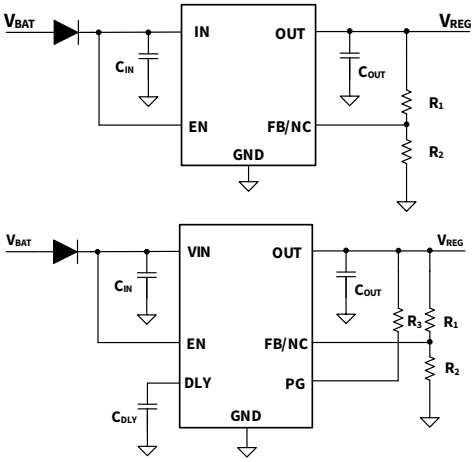

Copyright © 2023, NOVOSENSE

Index

1. PIN CONFIGURATION AND FUNCTIONS 3

2. ABSOLUTE MAXIMUM RATINGS 5

3. ESD RATINGS 5

4. RECOMMENDED OPERATING CONDITIONS 5

5. THERMAL INFORMATION 6

6. SPECIFICATIONS 6

6.1. ELECTRICAL CHARACTERISTICS 6
6.2. TYPICAL PERFORMANCE CHARACTERISTICS 8

7. DETAILED DESCRIPTION 11

7.1. OVERVIEW 11
7.2. BLOCK DIAGRAM 11
7.3. FEATURE DESCRIPTION 11
7.3.1. Input 12
7.3.2. Input Under-voltage Lockout (UVLO) 12
7.3.3. Enable (EN) 12
7.3.4. Output and Feedback (FB) 12
7.3.5. Power Good (PG) and Reset Delay Timer (DLY) 12
7.3.6. Output Current Limit 13
7.3.7. Thermal Shutdown (TSD) 13
7.4. TYPICAL APPLICATION 13
7.4.1. Application Circuit 13
7.4.2. Input and Output Capacitor 13
7.4.3. Power Dissipation and Thermal Calculations 13

8. LAYOUT 14

8.1. LAYOUT GUIDELINES 14
8.2. LAYOUT EXAMPLE 14

9. PACKAGE INFORMATION 16

9.1. HMSOP8 16
9.1.1. Tape and Reel 16
9.1.2. Mechanical Data 17
9.1.3. Recommended Land Pattern 18
9.2. HSOP8 19
9.2.1. Tape and Reel 19
9.2.2. Mechanical Data 20
9.2.3. Recommended Land Pattern 21

10. ORDER INFORMATION 22

11. REVISION HISTORY 23

Copyright © 2023, NOVOSENSE

1. Pin Configuration and Functions

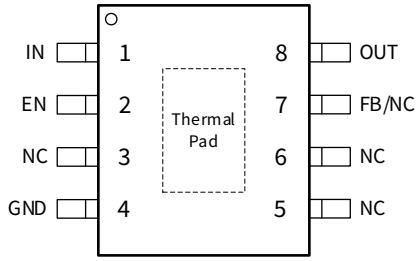

Figure 1 NSR330 Series Pin-out

PIN NO.	SYMBOL	FUNCTION
1	IN	Power supply pin.
2	EN	Enable pin, connect to high or low to enable or disable the device. Do not float.
3, 5, 6	NC	Not connected.
4	GND	Ground reference
7	FB/NC	Feedback pin when output adjustable, or NC pin in output fixed variants.
8	OUT	Regulated output voltage pin.

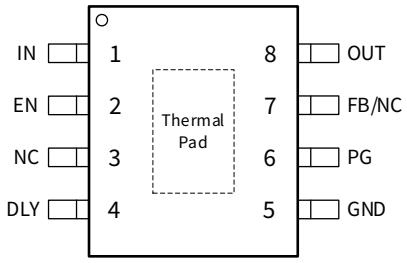

Figure 2 NSR331 Series Pin-out

PIN NO.	SYMBOL	FUNCTION
1	IN	Power supply pin.
2	EN	Enable pin, connect to high or low to enable or disable the device. Do not float.
3	NC	Not connected.
4	DLY	Reset delay timer pin, PG reset delay adjustment with different capacitor values connected to GND.
5	GND	Ground reference.
6	PG	Power good indication pin internally connected to the drain of a MOSFET. When used, connect to an external source with a proper pull-up resistor.

Copyright © 2024, NOVOSENSE

PIN NO.	SYMBOL	FUNCTION
7	FB/NC	Feedback pin when output adjustable, or NC pin in output fixed variants.
8	OUT	Regulated output voltage pin.

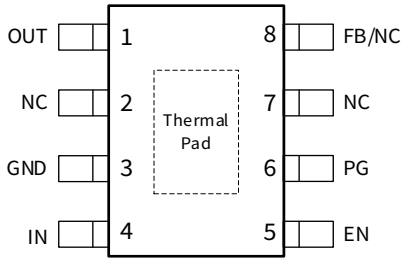

Figure 3 NSR332 Series Pin-out

PIN NO.	SYMBOL	FUNCTION
1	OUT	Regulated output voltage pin.
2, 7	NC	Not connected.
3	GND	Ground reference.
4	IN	Power supply pin.
5	EN	Enable pin, connect to high or low to enable or disable the device. Do not float.
6	PG	Power good indication pin internally connected to the drain of a MOSFET. When used, connect to an external source with a proper pull-up resistor.
8	FB/NC	Feedback pin when output adjustable, or NC pin in output fixed variants.

Copyright © 2024, NOVOSENSE

2. Absolute Maximum Ratings

Parameters	Symbol	Min	Typ	Max	Unit
Input Voltage of IN	V_{IN}	-0.3		42	V
Input Voltage of EN	V_{EN}	-0.3		V_{IN}	V
Regulated Output Voltage	V_{OUT_ADJ}	-0.3		20 (≤ V_{IN} + 0.3)	V
Fixed Output Voltage	V_{OUT_FIX}	-0.3		7	V
FB Pin Voltage	V_{FB}	-0.3		7	V
PG Pin Voltage	V_{PG}	-0.3		20	V
DLY pin Voltage	V_{DLY}	-0.3		7	V
Junction Temperature	T_J	-40		150	°C
Storage Temperature	T_{est}	-65		150	°C

(1) Stresses beyond those listed under Absolute Maximum Ratings may cause permanent damage to the device.
(2) All voltage values are with respect to the GND terminal.

3. ESD Ratings

Parameters	Symbol	Value	Unit
V(ESD) Electrostatic discharge	Human-body model (HBM), per AEC-Q100-002-RevD	±2000	V
	Charged device model (CDM), per AEC-Q100-011-RevB	±750	V

4. Recommended Operating Conditions

Parameters	Symbol	Min	Typ	Max	Unit
Power Supply Voltage	V_{IN}	3		40	V
Output Voltage Range	V_{OUT}	0.65		18	V
Output Current Range	I_{OUT}			300	mA
Enable Input Voltage	V_{EN}	0		V_{IN}	V
Power Good Output Voltage	V_{PG}			18	V
Delay Pin Voltage	V_{DLY}			5.5	V
Input Capacitor Value	C_{IN}	0.1	2.2		μF
Output Capacitor Value	C_{OUT}	1		200	μF
Output Capacitor ESR Value	ESR	0.001		3	Ω
Power Good Delay Capacitor	C_{DLY}			1	μF

Copyright © 2024, NOVOSENSE

5. Thermal Information

Parameters	*Symbol*	*HMSOP8*	*HSOP8*	*Unit*
IC Junction-to-Air Thermal Resistance(1)	θ_{JA}	62.7	47.3	°C/W
Junction-to-case thermal resistance(1)	θ_{JC}	13.2	9.5	°C/W
Junction-to- case characterization parameter(1)	Ψ_{JC}	3.6	10.3	°C/W

(1) The thermal data is based on the JEDEC standard high-K profile, JESD 51-7, four layer board.

6. Specifications

6.1. Electrical Characteristics

V_{IN} = 13.5 V, T_A = -40 °C to 125 °C. Unless otherwise noted, typical value is at T_A = 25 °C.

Parameters	*Symbol*	*Min*	*Typ*	*Max*	*Unit*	*Comments*
Supply Voltage and Current						
Supply voltage	V_{IN}	3		40	V	
Supply voltage threshold (Rising)	$V_{IN,TH1}$	2.97			V	V_{IN} ramps up
Supply voltage threshold (Falling)	$V_{IN,TH2}$			2.5	V	V_{IN} ramps down
Shutdown current	I_{SD}		0.2	0.59	µA	EN low
Quiescent current	I_Q		5	10	µA	EN high, I_{OUT} = 0 mA
			7	16.1	µA	EN high, I_{OUT} = 0.2 mA
Enable Input						
EN input threshold	V_{EN_H}	1.7			V	High level logic input
	V_{EN_L}			1.2	V	Low level logic input
EN input current	I_{EN}		0.001	0.05	µA	
Regulated Output						
Output current limit	I_{OUT_CL}	305			mA	
Dropout voltage(1)	$V_{Dropout}$		320	510	mV	V_{OUT} = V_{OUT_SET} x 0.95 I_{OUT} = 300 mA, Vout = 5 V
Output voltage accuracy	V_{OUT_ERR}	-2		2	%	I_{OUT} = 1 mA
Line regulation	V_{Line_Reg}			10	mV	V_{IN} = 6 to 40 V, I_{OUT} = 5 mA
Load regulation / Vout				1.5	%	V_{IN} = 13.5 V, I_{OUT} = 1 mA to 300 mA

Copyright © 2024, NOVOSENSE

Parameters	*Symbol*	*Min*	*Typ*	*Max*	*Unit*	*Comments*
FB reference voltage	V_{FB_REF}	0.637	0.650	0.663	V	Adjustable version only
Power supply ripple rejection	PSRR		85		dB	I_{OUT} = 10 mA, frequency = 100 Hz, C_{OUT} = 2.2 µF
			65		dB	I_{OUT} = 10 mA, frequency = 1 kHz, C_{OUT} = 2.2 µF
Power Good						
PG reset output, low voltage	V_{PG_LO}			0.4	V	I_{PG_LO}=0.5 mA
PG leakage current	I_{PG_lkg}			1	µA	PG leakage current when pulled high
Power Good Threshold (Rising)	V_{PG_TH1}	88.0	91.9	95.3	%V_{OUT}	Vout ramps up
Power Good Threshold (Falling)	V_{PG_TH2}	83.0	87.0	91.0	%V_{OUT}	Vout ramps down
Reset Delay						
DLY external capacitor charging current	I_{DLY_CHG}		1.4		µA	
DLY threshold	V_{DLY_TH}		1		V	
Power Good Reset Delay time	t_{PG_FIX}		290	650	µs	No capacitor on DLY pin
Power Good Reset Deglitch time	$t_{PG_Deglitch}$	20	270		µs	
Operating Temperature						
Device thermal shutdown temperature	T_{SD}		175		°C	
Device thermal shutdown temperature hysteresis	T_{HYST}		20		°C	

(1) The dropout voltage refers to the minimum voltage between V_{IN} and V_{OUT} that needed for regulation.

Copyright © 2024, NOVOSENSE

6.2. Typical Performance Characteristics

Unless otherwise noted, typical value is at V_{IN} = 13.5 V.

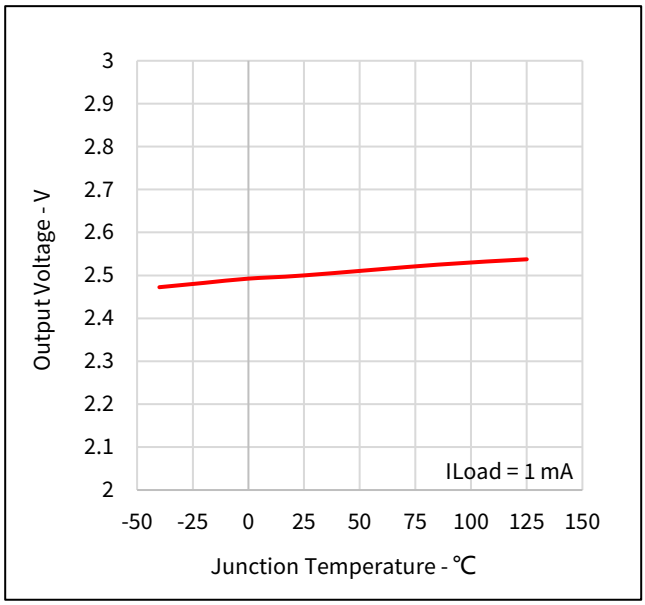

Figure 4 2.5-V Output Voltage vs Junction Temperature

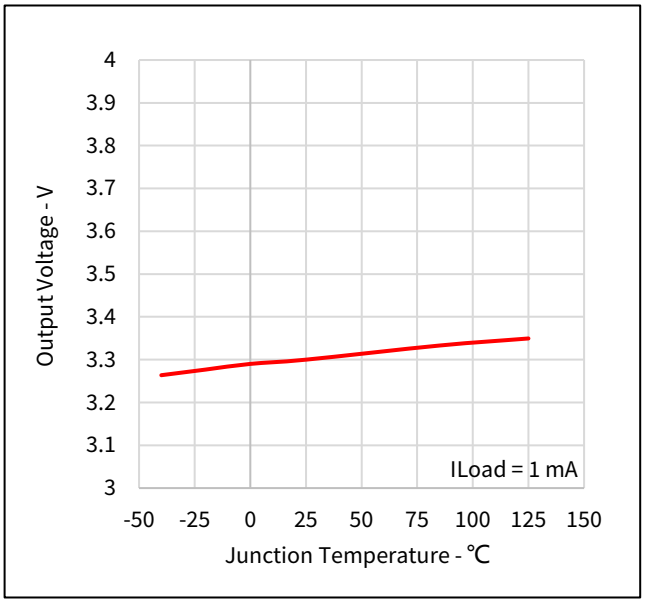

Figure 5 3.3-V Output Voltage vs Junction Temperature

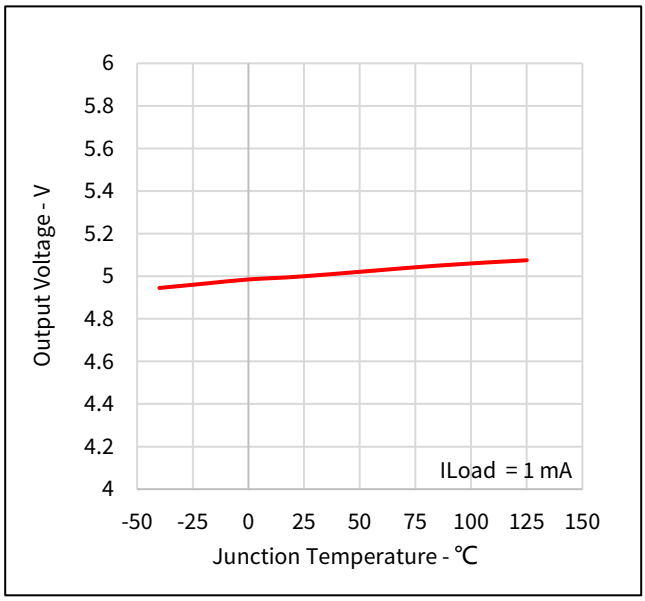

Figure 6 5-V Output Voltage vs Junction Temperature

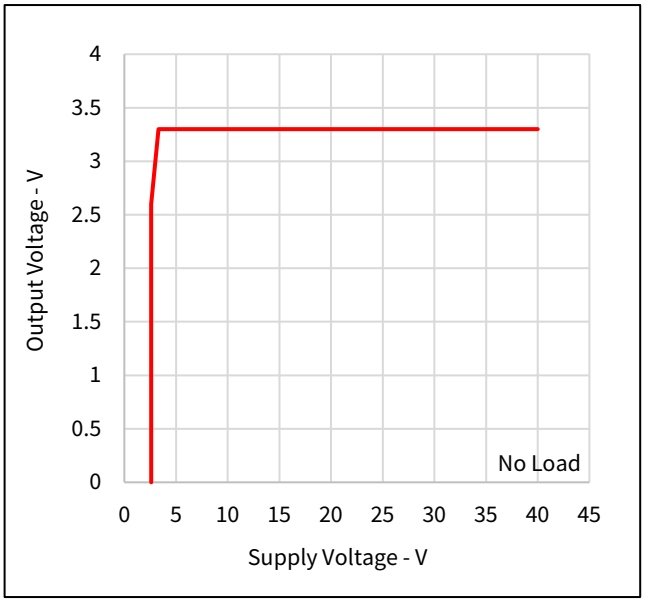

Figure 7 3.3-V Output Voltage vs Supply Voltage

Copyright © 2024, NOVOSENSE

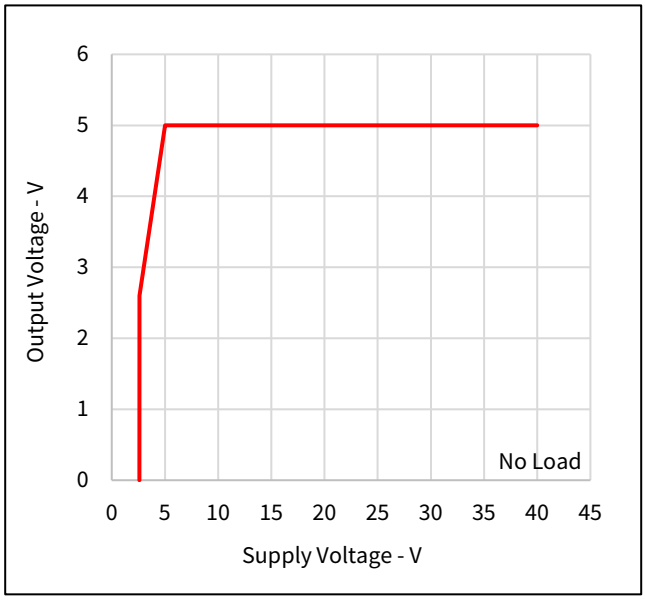

Figure 8 5-V Output Voltage vs Supply Voltage

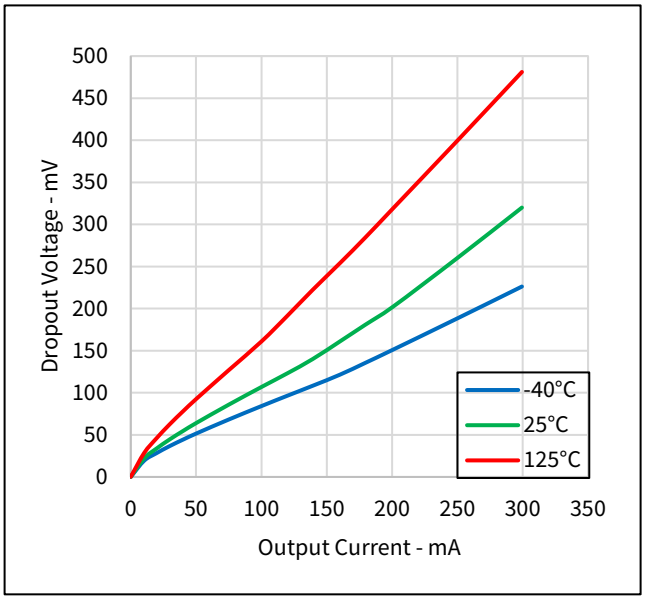

Figure 9 Dropout Voltage vs Output Current

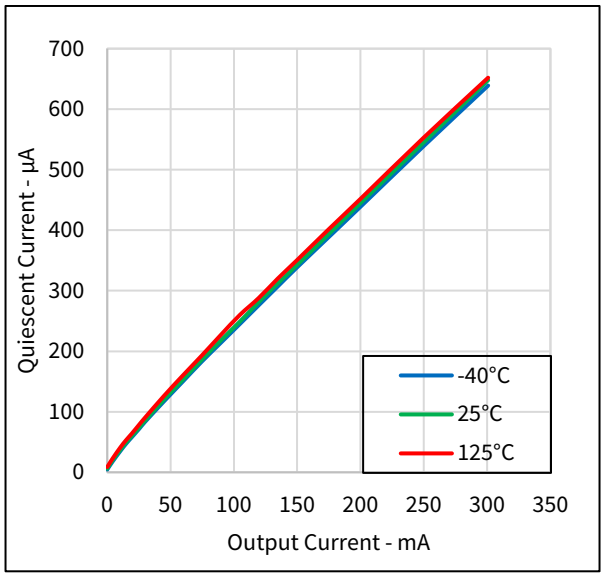

Figure 10 Quiescent Current vs Output Current

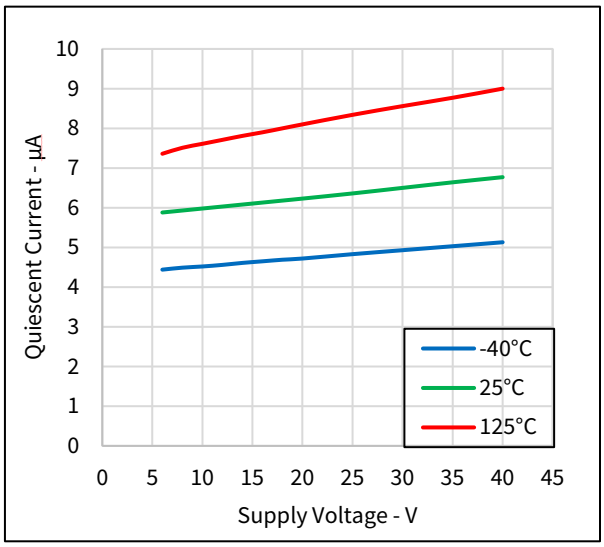

Figure 11 Quiescent Current vs Supply Voltage

Copyright © 2024, NOVOSENSE

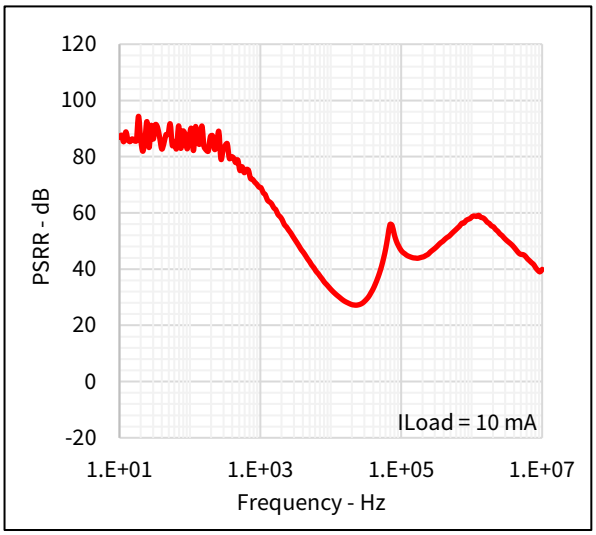

Figure 12 Power Supply Rejection Ratio (PSRR)

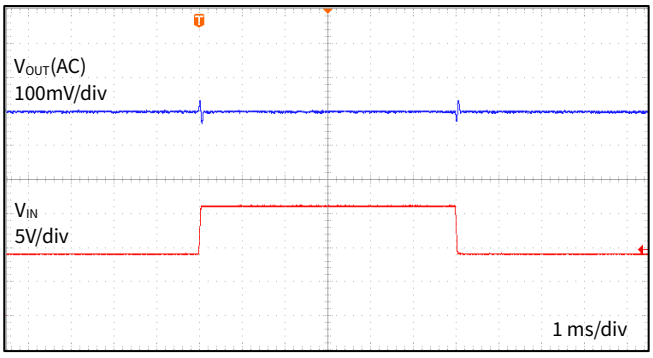

V_{IN}=9 to 16 V I_O=10 mA C_{OUT}=2.2 µF

Figure 13 Line Transient

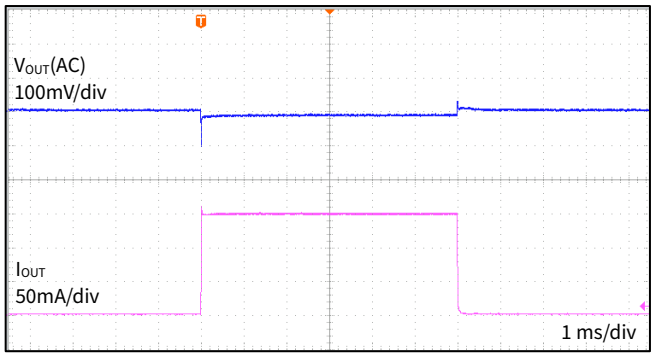

I_O=1 to 150 mA V_{IN}=13.5 V C_{OUT}=2.2 µF

Figure 14 Load Transient

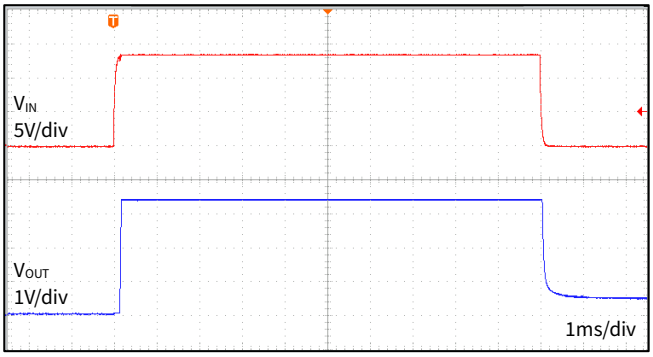

V_{IN}=0 V to 13.5 V to 0 V I_O=0 mA C_{OUT}=2.2 µF

Figure 15 Power Up & Down

Copyright © 2024, NOVOSENSE

7. Detailed Description

7.1. Overview

NSR330, NSR331 and NSR332 series are 300 mA low-dropout linear regulator designed for battery-direct-connection automotive applications. Wide supply voltage range from 3 V to 40 V makes the series a good fit for severe operating conditions including load dump, cold cranking and start-stop. With 5 µA quiescent current at light loads, NSR330, NSR331 and NSR332 series are quite suitable for always-on automotive applications where standby power consumption is strictly restricted. With integrated compensation implementation, NSR330, NSR331 and NSR332 series can be stable with low-ESR ceramic output capacitor, ranging from 1 µF to 200 µF.

7.2. Block Diagram

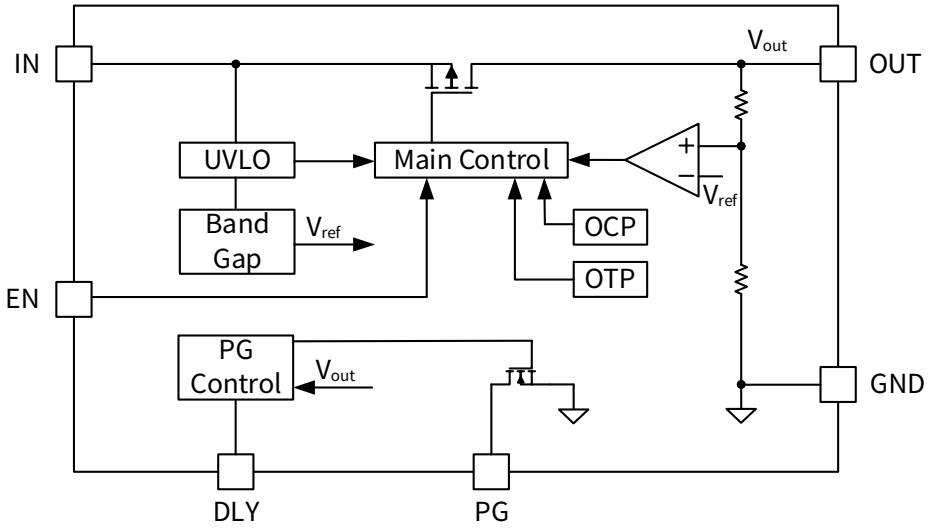

Figure 16 Functional Block Diagram of Fixed Vout Version

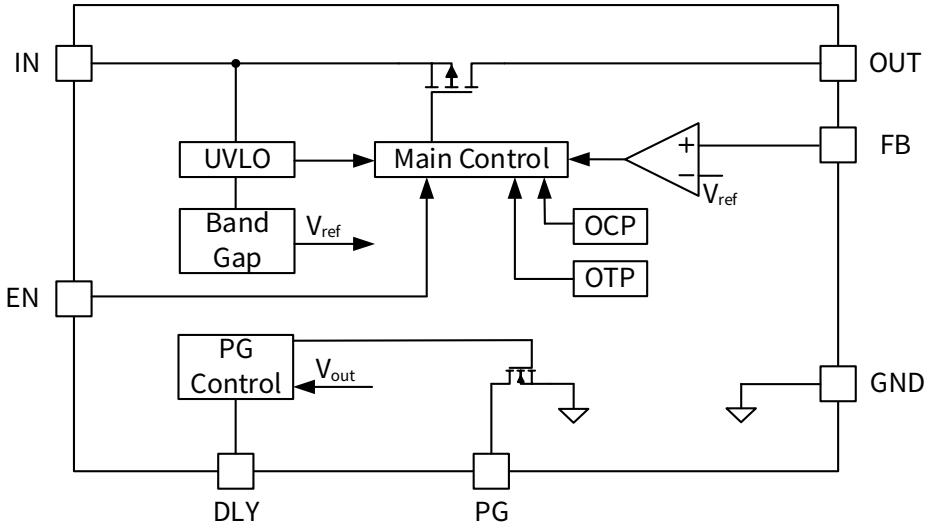

Figure 17 Functional Block Diagram of Adjustable Vout Version

7.3. Feature Description

Copyright © 2024, NOVOSENSE

7.3.1. Input

The IN pin is a high-voltage-tolerant pin. A capacitor with a value higher than 0.1 µF is recommended to be connected close to this pin to better the transient performance.

7.3.2. Input Under-voltage Lockout (UVLO)

When input voltage is lower than UVLO threshold ($V_{IN,TH2}$), output is shut off as the device shuts down. When the input voltage rises to the turn-on threshold voltage ($V_{IN,TH1}$), the device restarts. The turn-on threshold voltage is higher than the UVLO threshold voltage.

7.3.3. Enable (EN)

When EN input is connected to a voltage higher than EN rising threshold (1.7 V minimum), the device is ON. When EN input voltage is lower than EN falling threshold (1.2 V maximum), the device is OFF. Do not let this pin float.

7.3.4. Output and Feedback (FB)

For fixed output versions, the OUT pin is the regulated by internal reference to 2.5 V, 3.3 V and 5 V. To obtain a desired output voltage, a higher level input voltage is needed to apply in input pin. When input voltage is very close to desired output voltage in heavy load, or lower than desired output, the output tracks the input minus a drop based on the load current.

For adjustable output versions, the OUT pin is regulated by internal reference and external feedback resistors divider connected to FB pin.

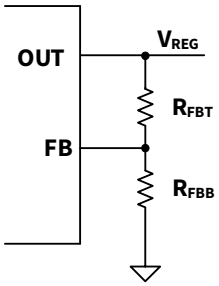

Figure 18 Feedback Resistors Connection

The output voltage is calculated as:

$$V_{OUT} = \frac{R_{FBT} + R_{FBB}}{R_{FBB}} \times V_{REF}$$

Typical value of V_{REF} is 0.65 V.

7.3.5. Power Good (PG) and Reset Delay Timer (DLY)

PG pin is an open-drain output. When used, connect it to an external voltage source or output voltage with a proper pull-up resistor. When regulated output voltage is lower than PG falling threshold, the internal MOSFET is in on-state and PG pin is set as low. When regulated output voltage exceeds PG rising threshold, the internal MOSFET is in off-state and PG pin is set as high.

DLY pin is used to setting the timer delay before the reset pin is asserted high by connecting an external capacitor to ground. When this pin is open, the typical delay time is 290 µs. When this pin is connected to an external capacitor, the delay time is calculated as:

Copyright © 2024, NOVOSENSE

$$t_{DLY} = \frac{C_{DLY} \times 1\,V}{1.4\,\mu A}$$

After the PG pin is high, the DLY capacitor discharges.

7.3.6. Output Current Limit

The output has a current limit protection, when load current is higher than current limit threshold or output is shorted to ground, output current is limited at threshold level.

7.3.7. Thermal Shutdown (TSD)

When junction temperature exceeds thermal protection threshold (T_{SD}), the device shuts down immediately. When the junction temperature falls below the TSD trip point minus the hysteresis of TSD (T_{HYST}), the output turns on again.

7.4. Typical Application

7.4.1. Application Circuit

NSR330, NSR331 and NSR332 series are 300 mA low-dropout linear regulator designed for battery-direct-connection automotive applications. With 5 µA quiescent current at light loads, NSR330, NSR331 and NSR332 series are quite suitable for always-on automotive applications where standby power consumption is strictly restricted. The following application schematic shows the typical usage of the series.

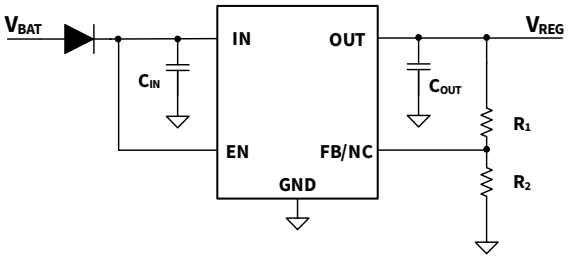

Figure 19 Typical application circuit of NSR330 series

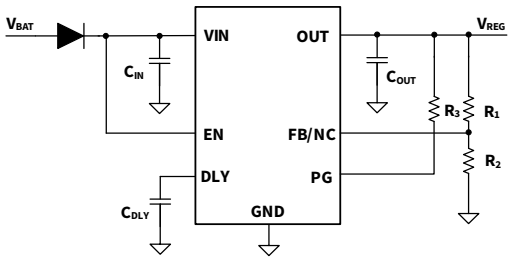

Figure 20 Typical application circuit of NSR331 series

7.4.2. Input and Output Capacitor

For input, a decoupling capacitor is needed with a minimum 0.1 µF capacitance. The voltage rating must be greater than the maximum input voltage. A low ESR, X5R- or X7R-type ceramic capacitor is recommended.

For output, the device requires an output capacitor for loop stability. The output capacitor value should be between 1 µF and 200 µF. The ESR value range should be less than 3 Ω. A low ESR, X5R- or X7R-type ceramic capacitor is recommended.

7.4.3. Power Dissipation and Thermal Calculations

Copyright © 2024, NOVOSENSE

The power dissipation and junction temperature of the chip need to be evaluated before use. For the NSR330, NSR331 and NSR332 series, the power dissipation of the chip consists of two parts: 1. Power dissipation due to MOSFET voltage drop from input to output. 2. Power dissipation generated by other basic circuits in the chip. The above power dissipation can be calculated using the following formula, where P_D stands for power dissipation.

$$P_D = (V_{IN} - V_{OUT}) \times I_{OUT} + V_{IN} \times I_Q$$

I_Q is much smaller than I_{OUT} when the chip loading, the second term of formula above can be ignored in most cases. Under certain heat dissipation conditions, the chip junction temperature (T_J) can be calculated by combining the top case temperature (T_C) and the Junction-to-case characterization parameter (Ψ_{JC}), as shown in the formula below:

$$T_J = \Psi_{JC} \times P_D + T_C$$

It's recommended to estimate the junction temperature for the application to avoid long-term operating temperatures exceeding 150 °C.

8. Layout

8.1. Layout Guidelines

For input trace, capacitors should be close to IN pin and GND pin, the distance should be less than 10 mm. For output trace, capacitors should be close to current path. Both input and output traces should be wide enough for rating current capability. For GND trace, large polygon plane should be used for better heat dissipation, via arrays are recommended to connect multiple layers to improve thermal performance. For adjustable versions, feedback resistors should be close to FB pin.

8.2. Layout Example

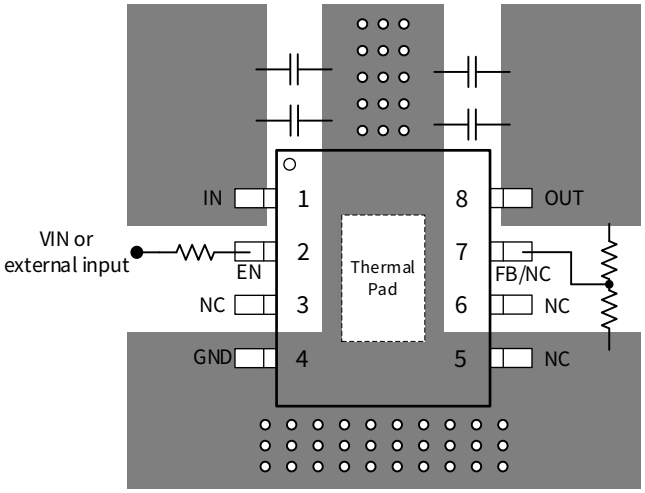

Figure 21 MSOP8-EP (NSR330 Version) Layout Example

Copyright © 2024, NOVOSENSE

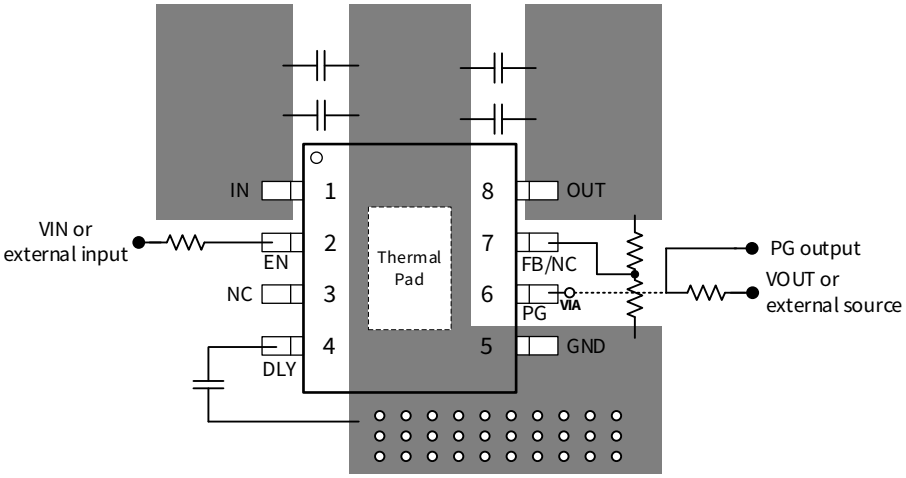

Figure 22 MSOP8-EP (NSR331 Version) Layout Example

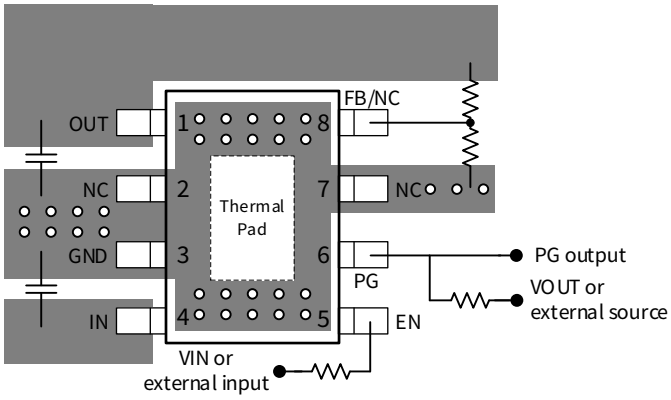

Figure 23 SOP8-EP (NSR332 Version) Layout Example

Copyright © 2024, NOVOSENSE

9. Package Information

9.1. HMSOP8

9.1.1. Tape and Reel

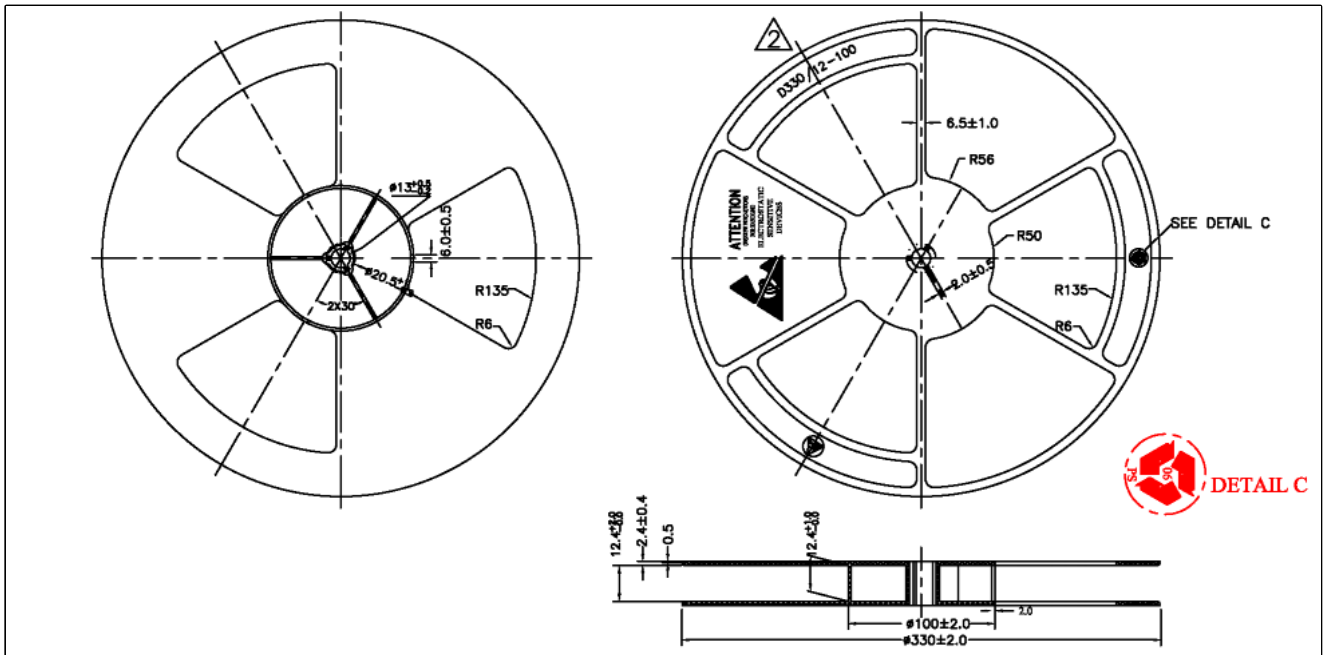

NOTES:
1. MATERIAL: POLYSTYRENE (BLACK).
2. ALL DIMENSIONS NOTED ARE IN MILLIMETERS.
3. TOLERANCE ON ALL DIMENSIONS (NOT OTHERWISE NOTED) IS ±0.25.

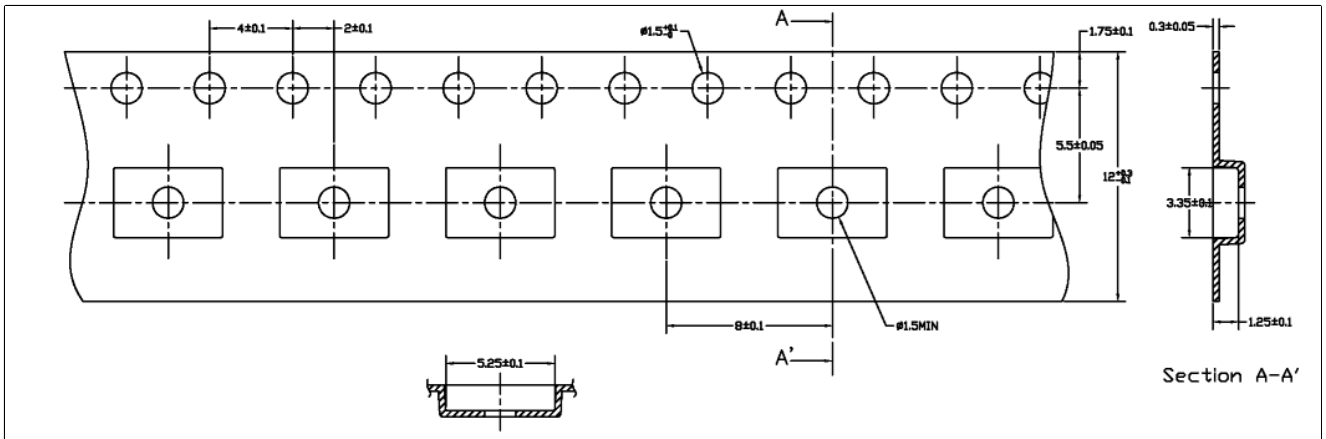

NOTES:
1.MATERIAL:Hard polystyrene(PS)
2.ALL DIMS IN MM
3.There must not be foreign body adhesion and the state of the surface must be excellent
4.The meander of the tape is assumed with 1mm or less every 100mm between 250mm
5.A permissible difference of the accumulation pitch of the sending hole is assumed to be ±0.3 up to 50 pitches
6.ø560 Paper-Reel, 60000 pockets(480M)
7.Corner R=0.3max
8.Surface resistance 1X10E5≤Rs≤1X10E9 OHMS/SQ

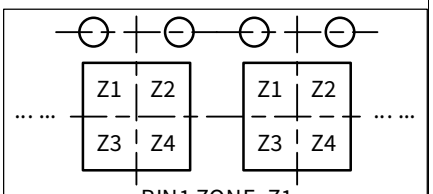

PIN1 ZONE: Z1

9.1.2. Mechanical Data

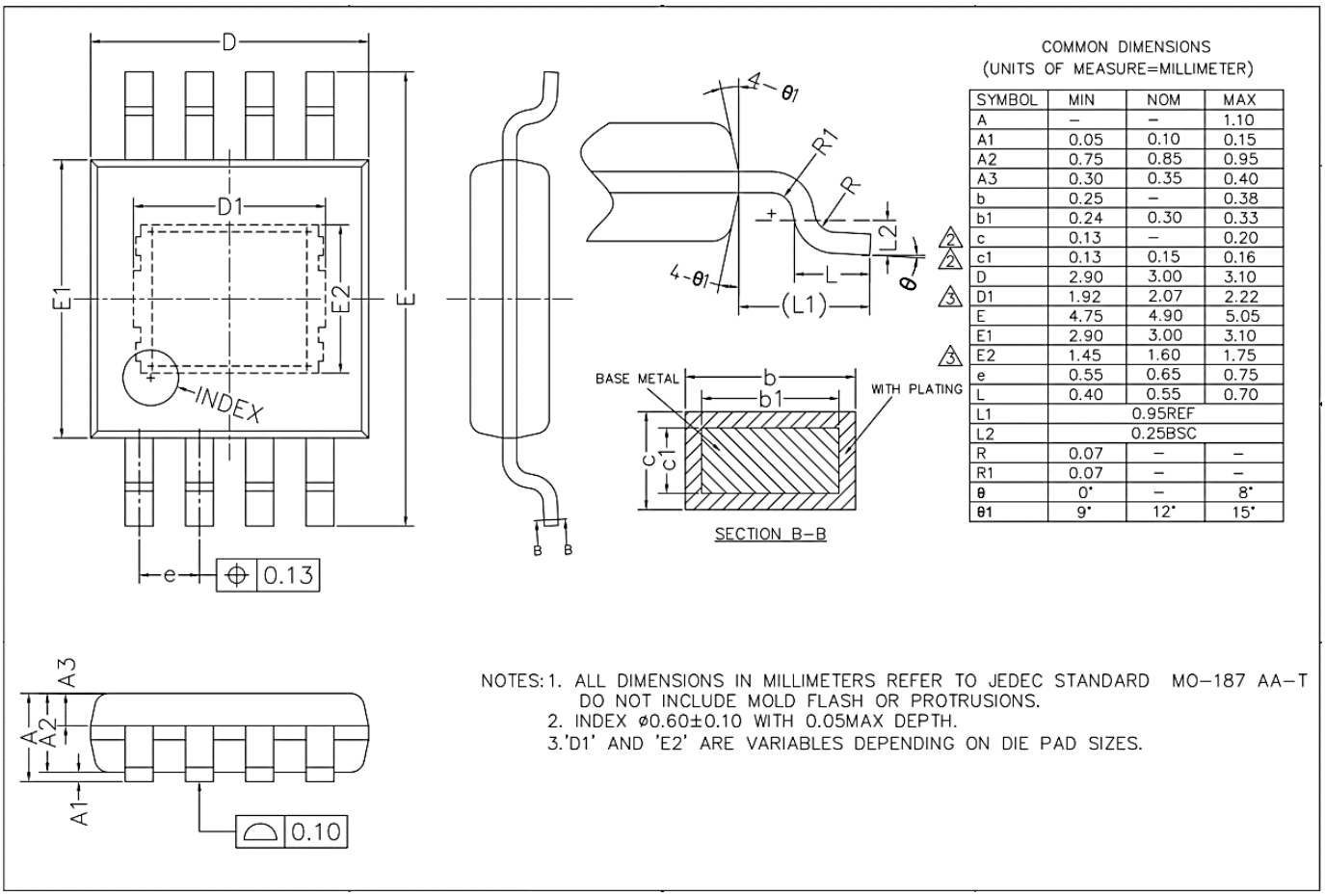

COMMON DIMENSIONS
(UNITS OF MEASURE=MILLIMETER)

SYMBOL	MIN	NOM	MAX
A	–	–	1.10
A1	0.05	0.10	0.15
A2	0.75	0.85	0.95
A3	0.30	0.35	0.40
b	0.25	–	0.38
b1	0.24	0.30	0.33
c	0.13	–	0.20
c1	0.13	0.15	0.16
D	2.90	3.00	3.10
D1	1.92	2.07	2.22
E	4.75	4.90	5.05
E1	2.90	3.00	3.10
E2	1.45	1.60	1.75
e	0.55	0.65	0.75
L	0.40	0.55	0.70
L1	0.95REF		
L2	0.25BSC		
R	0.07	–	–
R1	0.07	–	–
θ	0°	–	8°
θ1	9°	12°	15°

9.1.3. Recommended Land Pattern

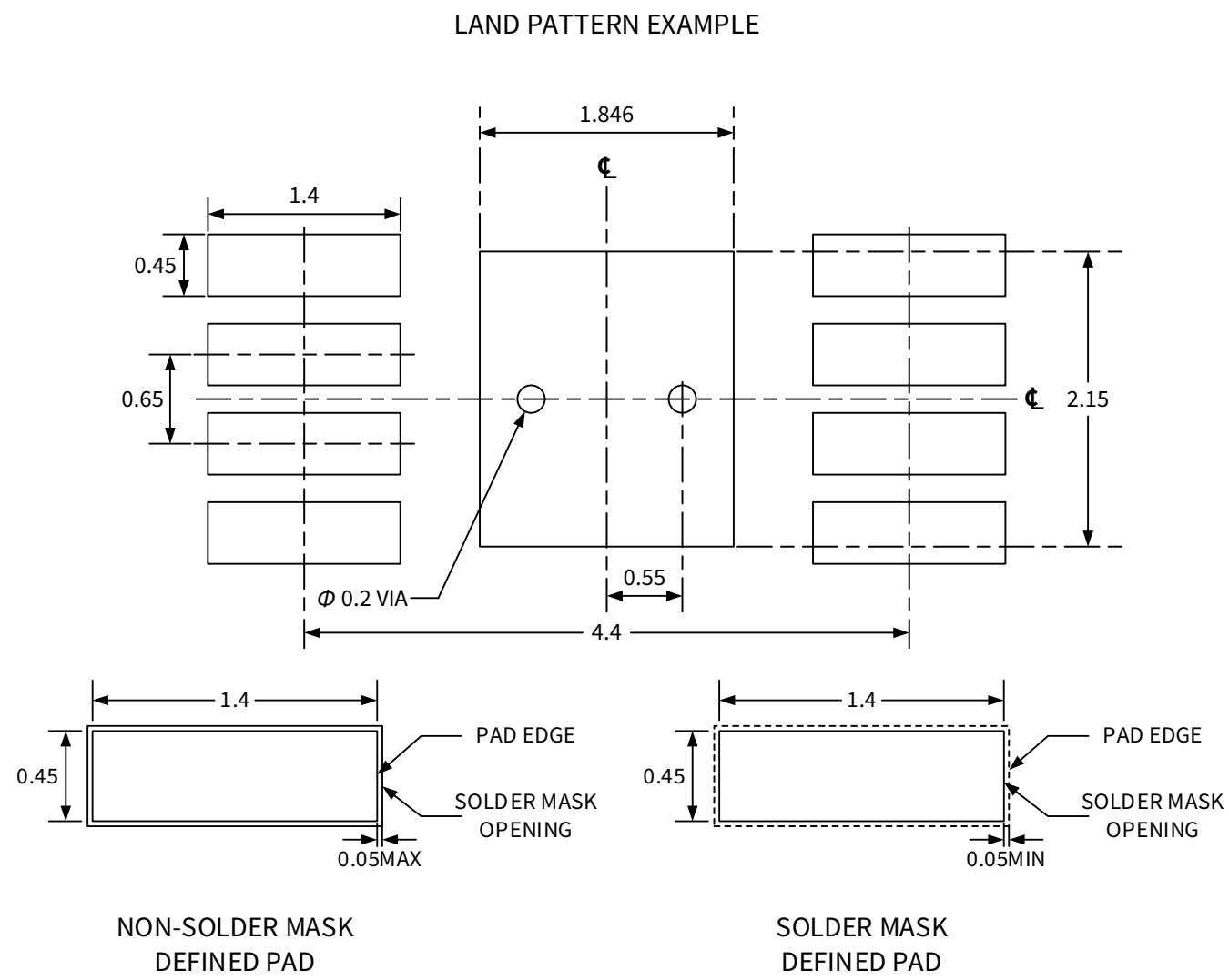

NOTES: ALL LINEAR DIMENSIONS ARE IN MILLIMETERS.

Copyright © 2024, NOVOSENSE

9.2. HSOP8

9.2.1. Tape and Reel

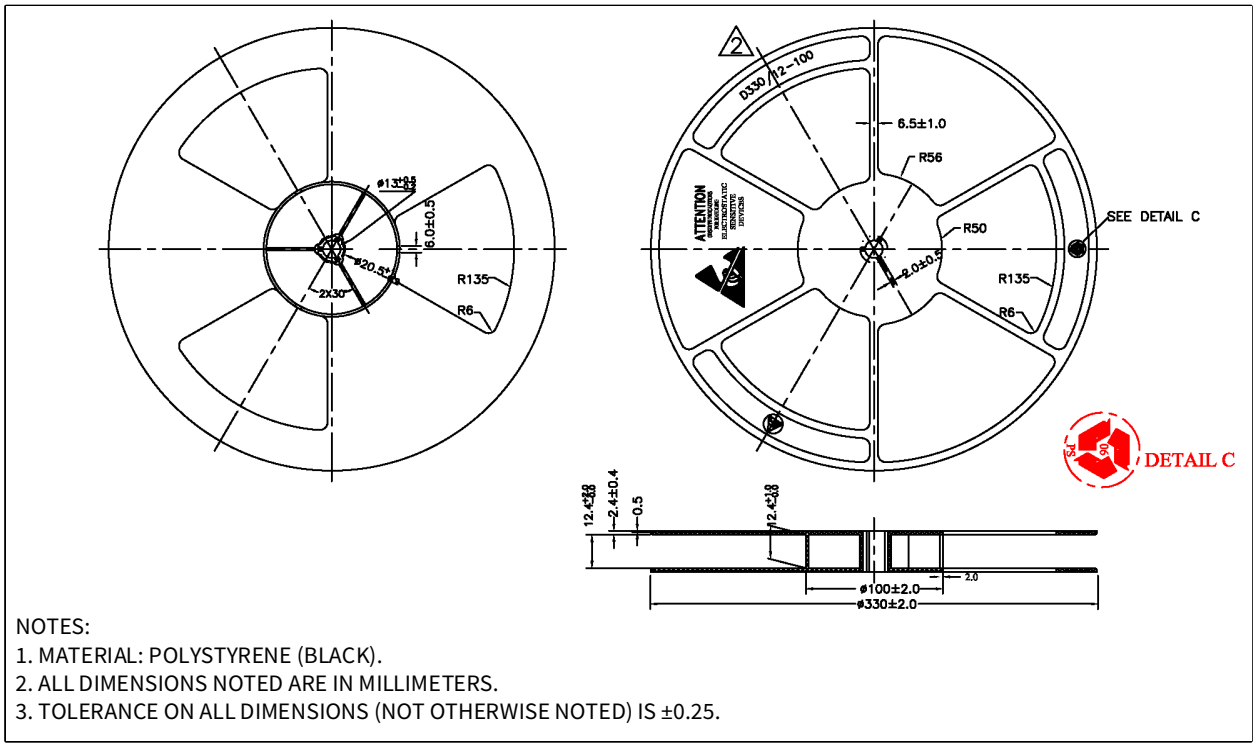

NOTES:
1. MATERIAL: POLYSTYRENE (BLACK).
2. ALL DIMENSIONS NOTED ARE IN MILLIMETERS.
3. TOLERANCE ON ALL DIMENSIONS (NOT OTHERWISE NOTED) IS ±0.25.

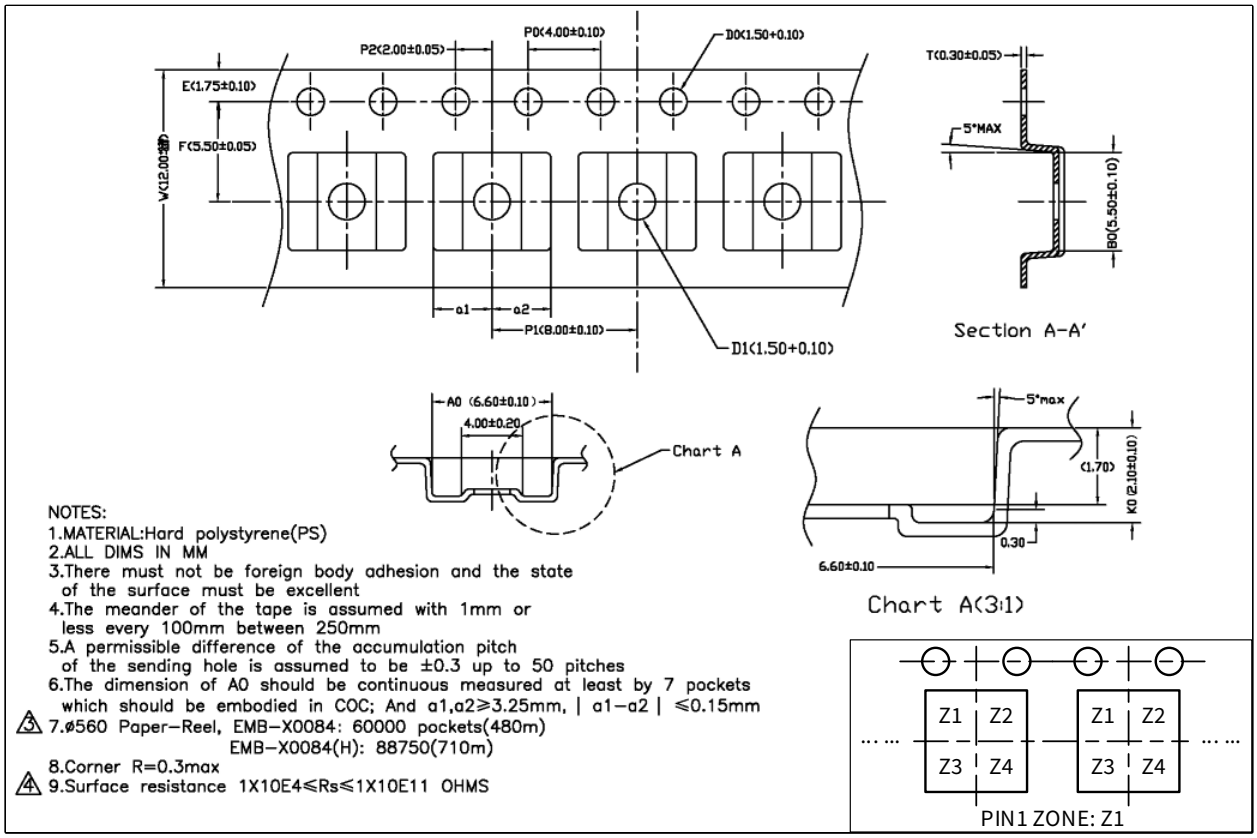

NOTES:
1.MATERIAL:Hard polystyrene(PS)
2.ALL DIMS IN MM
3.There must not be foreign body adhesion and the state of the surface must be excellent
4.The meander of the tape is assumed with 1mm or less every 100mm between 250mm
5.A permissible difference of the accumulation pitch of the sending hole is assumed to be ±0.3 up to 50 pitches
6.The dimension of A0 should be continuous measured at least by 7 pockets which should be embodied in COC; And a1,a2≥3.25mm, | a1−a2 | ≤0.15mm
7.ø560 Paper−Reel, EMB−X0084: 60000 pockets(480m)
EMB−X0084(H): 88750(710m)
8.Corner R=0.3max
9.Surface resistance 1X10E4≤Rs≤1X10E11 OHMS

9.2.2. Mechanical Data

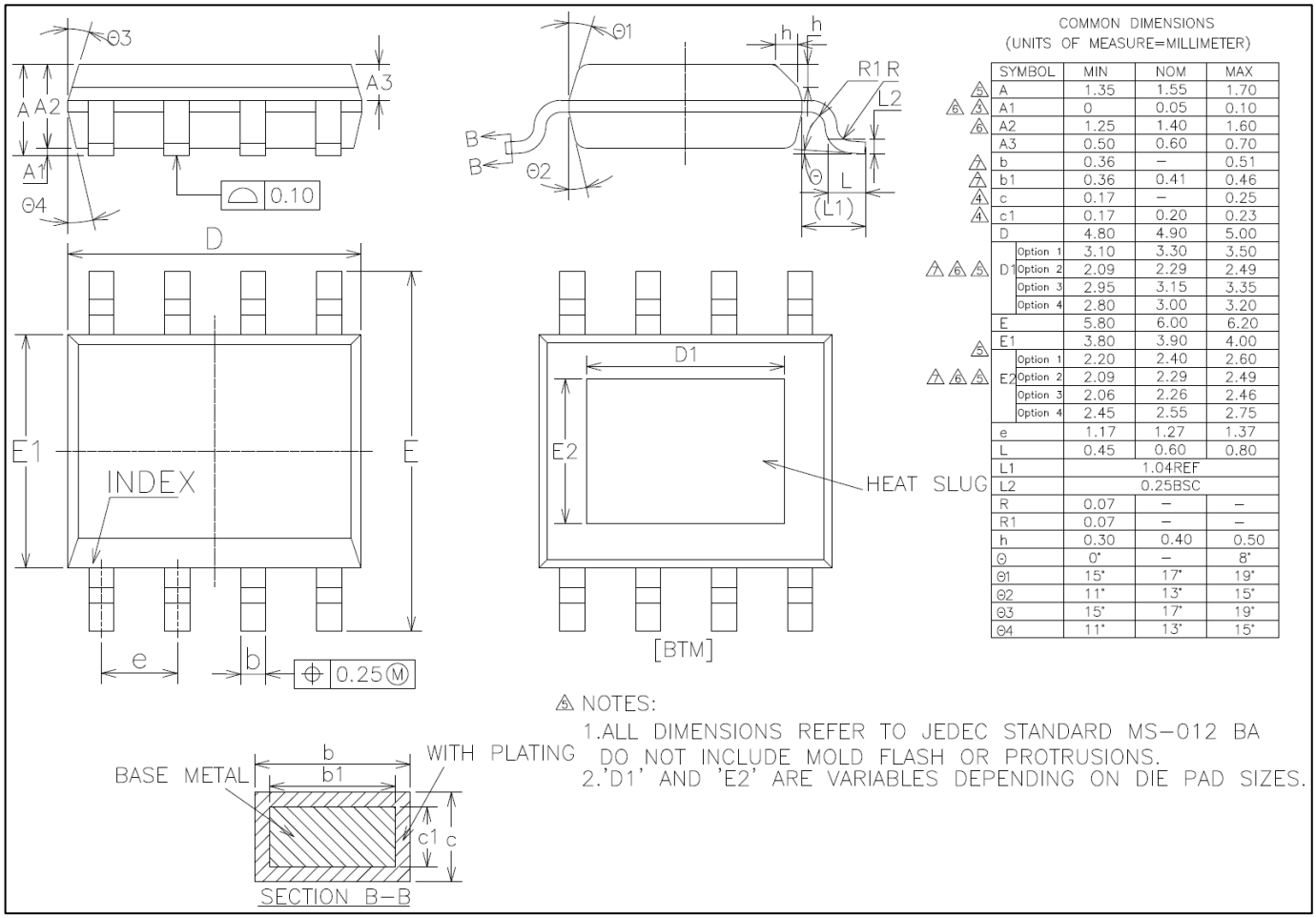

SYMBOL		MIN	NOM	MAX
A		1.35	1.55	1.70
A1		0	0.05	0.10
A2		1.25	1.40	1.60
A3		0.50	0.60	0.70
b		0.36	–	0.51
b1		0.36	0.41	0.46
c		0.17	–	0.25
c1		0.17	0.20	0.23
D		4.80	4.90	5.00
D1	Option 1	3.10	3.30	3.50
	Option 2	2.09	2.29	2.49
	Option 3	2.95	3.15	3.35
	Option 4	2.80	3.00	3.20
E		5.80	6.00	6.20
E1		3.80	3.90	4.00
E2	Option 1	2.20	2.40	2.60
	Option 2	2.09	2.29	2.49
	Option 3	2.06	2.26	2.46
	Option 4	2.45	2.55	2.75
e		1.17	1.27	1.37
L		0.45	0.60	0.80
L1		1.04REF		
L2		0.25BSC		
R		0.07	–	–
R1		0.07	–	–
h		0.30	0.40	0.50
Θ		0°	–	8°
Θ1		15°	17°	19°
Θ2		11°	13°	15°
Θ3		15°	17°	19°
Θ4		11°	13°	15°

9.2.3. Recommended Land Pattern

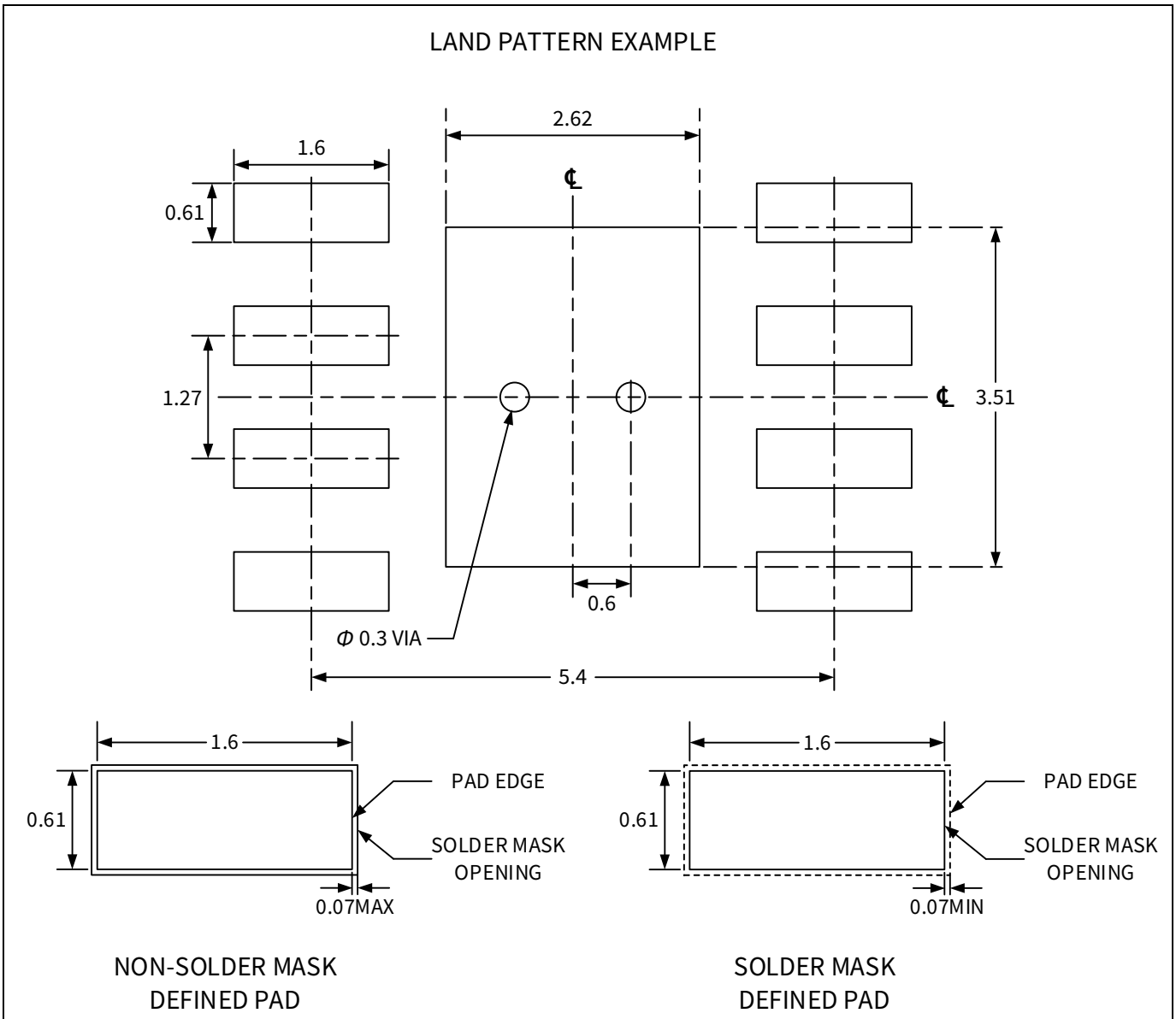

NOTES: ALL LINEAR DIMENSIONS ARE IN MILLIMETERS.

Copyright © 2024, NOVOSENSE

10. Order Information

Orderable Part Number	MSL	Package	SPQ	Marking
NSR33001-QHMSR	3	HMSOP8	2500	000F
NSR33025-QHMSR	3	HMSOP8	2500	025F
NSR33033-QHMSR	3	HMSOP8	2500	033F
NSR33050-QHMSR	3	HMSOP8	2500	050F
NSR33101-QHMSR	3	HMSOP8	2500	000G
NSR33125-QHMSR	3	HMSOP8	2500	025G
NSR33133-QHMSR	3	HMSOP8	2500	033G
NSR33150-QHMSR	3	HMSOP8	2500	050G
NSR33201-QHSPR	3	HSOP8	2500	000H
NSR33233-QHSPR	3	HSOP8	2500	033H
NSR33250-QHSPR	3	HSOP8	2500	050H

Copyright © 2024, NOVOSENSE

11. Revision history

Revision	Description	Date
1.0	Initial released version	2023/12

Copyright © 2024, NOVOSENSE

IMPORTANT NOTICE

The information given in this document shall in no event be regarded as any warranty or authorization of, express or implied, including but not limited to accuracy, completeness, merchantability, fitness for a particular purpose or infringement of any third party's intellectual property rights.

You are solely responsible for your use of Novosense' products and applications, and for the safety thereof. You shall comply with all laws, regulations and requirements related to Novosense's products and applications, although information or support related to any application may still be provided by Novosense.

The resources are intended only for skilled developers designing with Novosense' products. Novosense reserves the rights to make corrections, modifications, enhancements, improvements or other changes to the products and services provided. Novosense authorizes you to use these resources exclusively for the development of relevant applications designed to integrate Novosense's products. Using these resources for any other purpose, or any unauthorized reproduction or display of these resources is strictly prohibited. Novosense shall not be liable for any claims, damages, costs, losses or liabilities arising out of the use of these resources.

For further information on applications, products and technologies, please contact Novosense (www.novosns.com).

Suzhou Novosense Microelectronics Co., Ltd

Copyright © 2024, NOVOSENSE