Pb Process Capable | RoHS Compliant 2011/65/EU | HALOGEN Compliant Halogen Free

| REV. | ECN NO. | DESCRIPTION | DATE | DESIGN |
|---|---|---|---|---|
| | | | | |
| | | | | |

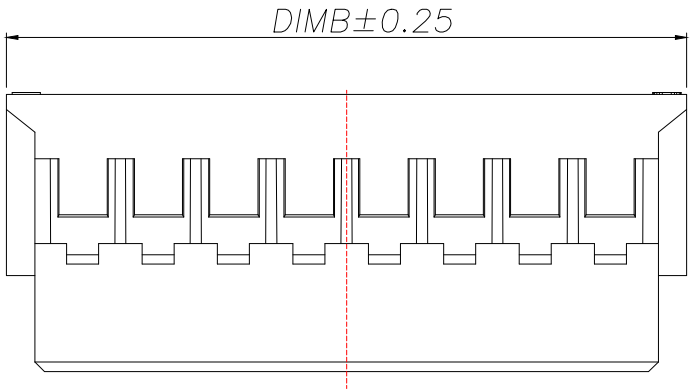


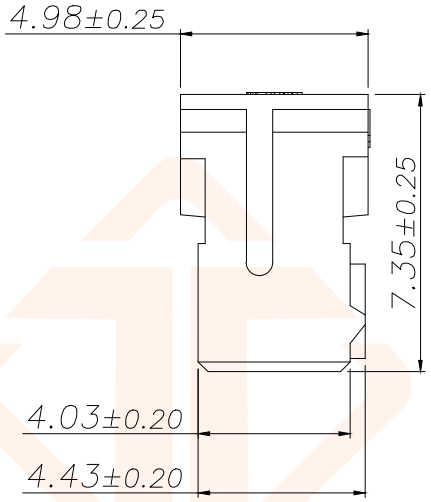


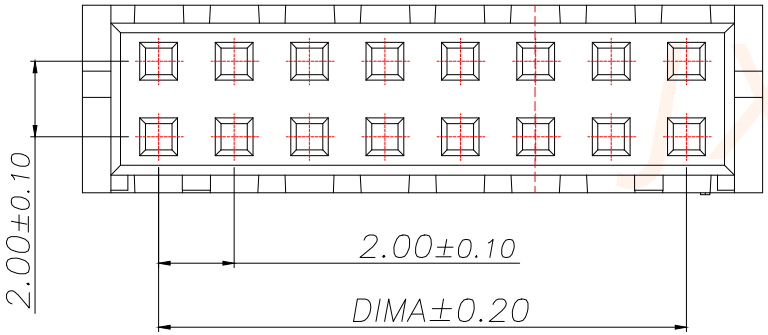


| 型号 | CKT | A | B |
|---|---|---|---|
| C-PHD2.0-2-M2P12 | 2*2 | 2.00 | 6.00 |
| C-PHD2.0-2-M3P12 | 2*3 | 4.00 | 8.00 |
| C-PHD2.0-2-M4P12 | 2*4 | 6.00 | 10.00 |
| C-PHD2.0-2-M5P12 | 2*5 | 8.00 | 12.00 |
| C-PHD2.0-2-M6P12 | 2*6 | 10.00 | 14.00 |
| C-PHD2.0-2-M7P12 | 2*7 | 12.00 | 16.00 |
| C-PHD2.0-2-M8P12 | 2*8 | 14.00 | 18.00 |
| C-PHD2.0-2-M9P12 | 2*9 | 16.00 | 20.00 |
| C-PHD2.0-2-M10P12 | 2*10 | 18.00 | 22.00 |
| C-PHD2.0-2-M11P12 | 2*11 | 20.00 | 24.00 |
| C-PHD2.0-2-M12P12 | 2*12 | 22.00 | 26.00 |
| C-PHD2.0-2-M13P12 | 2*13 | 24.00 | 28.00 |
| C-PHD2.0-2-M14P12 | 2*14 | 26.00 | 30.00 |
| C-PHD2.0-2-M15P12 | 2*15 | 28.00 | 32.00 |
| C-PHD2.0-2-M16P12 | 2*16 | 30.00 | 34.00 |
| C-PHD2.0-2-M17P12 | 2*17 | 32.00 | 36.00 |
| C-PHD2.0-2-M18P12 | 2*18 | 34.00 | 38.00 |
| C-PHD2.0-2-M19P12 | 2*19 | 36.00 | 40.00 |
| C-PHD2.0-2-M20P12 | 2*20 | 38.00 | 42.00 |

技术指标:

1.温度范围:-25°C~+85°C.
2.额定电压:250V AC,DC.
3.耐电压:800V AC/minute.
4.接触电阻:≤20mΩ .
5.绝缘电阻:≥1000MΩ.
6.额定电流: 3A AC,DC.

材料:

1.塑胶:PA66 白色

| TOLERANCE | | 深圳聚兴泰电子科技有限公司 Shenzhen Juxingtai Electronic Technology Co., Ltd | | |
|---|---|---|---|---|
| .X±0.30 | X.°±5° | PART NO. C-PHD2.0-2-MNP12 | TITLE: PHD2.0公头胶壳 | |
| .XX±0.25 | X.X°±1° | | | |
| .XXX±0.15 | | DESIGN: Ethan | MANUFACTURE DWG | |
| UNITS | mm | | | |
| MATERILA | — — — | CHED: Olvia | SCALE N:A | SHEET 1/1 |
| FINISH | — — — | APPD: Ava | | |