REV	DESCRIPTION OF REVISION	ECN NO.	BY	DATE	APPROVED
A	Initial Release	———	H. wei	12/7/06	12/7/06

This document contains proprietary information and such informationmay not be disclosed to others for any purposes, not used for sales/marketing/procurement purposes without written permission

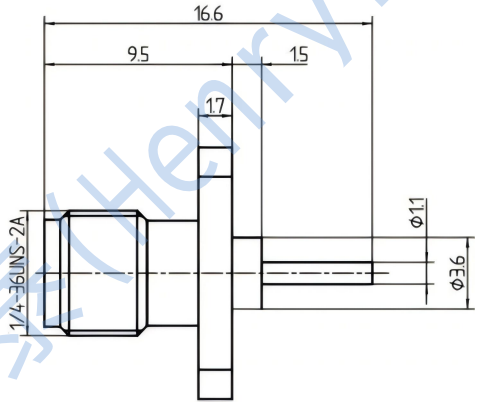

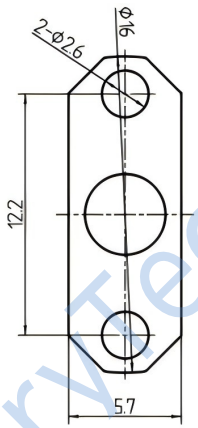

Mounting Hole

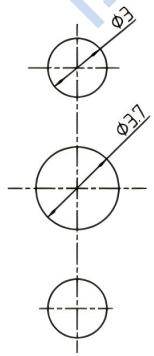

1 Electrical

1.1 Impedence	50Ω
1.2 Frequency	DC~6GHz
1.2 Dielectric withstanding voltage	1000V(volts RMS)
1.3 Center contact resistance	≤ 3MΩ
1.4 Outer contact resistance	≤ 2MΩ
1.5 Insulation resistance:	≥5000MΩ
1.6 VSWR	1.2max

2 Environmental&Mechanical

2.1 Temperature range	-45℃~85℃
2.2 RoHs Compliant	
2.3 Durability	>500 cycles

3 Materials&plating

3.1 Body:	Brass, Gold plated
3.2 Insulator:	Teflon
3.3 Contact Pin:	Beryllium-copper, Gold plated

Notes:

1. ALL SPECIFICATIONS ARE SUBJECT TO CHANGE NOTICE AT ANY TIME
2. CUSTOMER OUTLINE DRAWING FOR REFERENCE ONLY

DRAWN: H. wei 12/07/06
ENGINEER: L. yu 12/07/06
APPROVED: W. yi 12/07/06

TOLERANCES UNLESS OTHERWISE SPEFICIED
X ±0.50
.X ±0.20
.XX ±0.10
ANGLES ±1°

TITLE:
RF Coaxial Connector
SMA Female Flange
Connector Terminal

HenryTech

DIMENSION IN MILLIMETERS (mm)

PART NO:	SIZE:	SCALE:	SHEET:	REV:
HL-SMA-KFD1044	A4	N/A	1/1	A

恒利泰(HenryTech)