HONORCAP 荣誉

承认书

PRODUCT SPECIFICATION

客户：		日期：	2026/7/24
CUSTOMER:		DATE:	2026/7/24

品名：	铝式混合型电解电容
客户料号：	
料号：	HMB2M476M1012PZ
规格参数：	120V/47μF/10x12.5SMD贴片

批准 APPROVED BY			
姓名Name			
日期Code			

注：ROHS指令（2011/65/Eu）已经对应完毕
对承认书确认后，在用户承认栏注明确认印，返传一份于蔽公司，谢谢

东莞市荣誉电子有限公司
电话：0769-8535 9259
东莞市虎门镇捷南路729号
网站：www.honorcap.com

制作 PREPARED BY	审核 CHECKED BY	批准 APPROVED BY
申易勋	刘华龙	李上汕

东莞市荣誉电子有限公司 工程部

文件内容修改历史记录 RECORD OF REVISION					
生效版本 REV.NO.	变更原因 REASON	修改内容 CONTENTS	承认时间 DATE OF	拟制 CHECKED	备注 REMARKS
1	客户要求	新项目送样	2026/7/24	徐巍	
2					
3					
4					
5					
6					
7					
8					
9					
10					
11					
12					
13					
14					
15					

规格表Table

额定电压 Rated voltage (V)	标称容量 Capacitance (μF)	容量许容差 CAP. Tolerance (%)	尺寸 Case Size ΦD x L(mm)	损耗正切值 tan δ	漏电流 Leakage Current (μA)	ESR +20℃ 100KHz (mΩ)	纹波电流 Rated Ripple (mArms) 105℃ 100KHz	特性/ 使用寿命 Features / Service Life	荣誉料号 Honor Part Number
120	47	-20~+20%	10x12.5	0.08	56.4	65	1600	-55℃~105℃ /2000H	HMB2M476M1012PZ

■ 纹波电流频率的补偿系数 Frequency coefficient of allowable ripple current

频率 Frequency	120 Hz < f < 1 KHz	1 KHz < f < 10 KHz	10 KHz < f < 100 KHz	100 KHz < f < 300 KHz
系数 Coefficient	0.10	0.40	0.70	1.00

一、概述 SCOPE

本产品规格书适用于荣誉电子有限公司固液混合型铝电解电容产品。

The product specification is adapted to Hybrid Aluminum Electrolytic Capacitorsof Honor ELECTRONICS CO.,LTD

二、外形图及尺寸表 Case size table

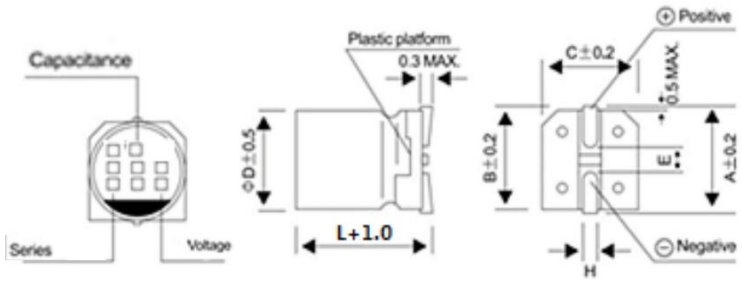

ΦD	10
L	12.5
A	11.0
B	10.3
C	10.3
E	4.7
H	0.8 to 1.1

三、技术性能 Specifications

1、	系列号(SERIES)	HMB	
2、	额定电压 (rated voltage)	120	
3、	工作温度范围 Operating temperature range	工作温度范围是指电容器在额定电压下能持续工作所允许外部环境的温度范围 operating temperature range is the range of ambient temperature at which the capacitor can be operated continuously at rated voltage SPEC:-55~+105℃	
4、	电容容量 capacitance	测量等效电路图	
		测量温度20℃	measuring temperature
		测量频率120HZ	measuring frequency
		测量电压 0.5Vrms	measuring voltage
		标称电容量允许偏差:±20% MAX	Nominal Capacitance Tolerance:±20% MAX
5、	损耗角正切值的测量应要和测量电容容量一样的条件下进行 Measurement should be made under the same conditions as those given for the measurement of capacitance		
	SPEC：		
	损耗正切值（tan δ）	$U_R(V)$	120
		tanδ	0.08
6、	漏电流 leakage current	将额定电压加在电容和1000± 100Ω的保护电阻上。在充电2分钟后，按下列等式计算漏电流。 the rated voltage shall be applied across the capacitor and its protective resistor which shall be 1000±100Ω.The leakage current shall be then measured after an electrifications period of (A)min. The leakage current shall be calculated by the following equation. 在加上额定电压一定时间后，应满足下列要求：LC ≤0.01CV （20℃、2分钟） SPEC: The following specifications shall be satisfied when the rated voltage is applied for the required time.	
7、	等效串联阻抗 Equivalent Series Resistance (ESR）	测量等效电路图 measuring circuit equivalent series circuit	
		测量温度20℃	measuring temperature
		测量频率100KHZ	measuring frequency
		测量电压0.5Vrms	measuring voltage
8、	允许最大纹波电流 Maximum permissible ripple current	在规定的某一频率下的最大交流电流，在该电流下电容器连续工作。即使在测过耐久性后，此要求仍要满足。在此，DC电压加上最大纹波电压小于等于额定电压。 The maximum sinusoidal alternating current of a frequency specified below, at which the capacitor can be operated continuously. This requirement shall be satisfied even after the measurement electrical endurance Where(DC voltage +peak ripple voltage)≤rated voltage	

		Step	Temperature(°C)	Measure items	**Impedance ratio of the -25℃ and -55℃ values to the +20℃ values shell be not exceed the values as below**
9、	温度特性 Temperature Characteristics	**1**	**+20±2**	**Impedance (at 100KHZ±20%)**	
		2	**-25±3**	**Impedance (at 100KHZ±20%)**	$Z_{-25℃}/Z_{+20℃}$ 2.0 $Z_{-55℃}/Z_{+20℃}$ 2.5
		3	**-55±3**	**Impedance (at 100KHZ±20%)**	

四、测试方法及要求 Tests

1	浪涌测试	在规定温度下循环测试1000次，每次充电30±5秒，在放电大约5分30秒。在标准温度条件下存放使其稳定，然后再测试。 he capacitor shall be subjected to 1000cycles at a temperature specified below, each consisting of a charge period of 30±5sec, followed by a discharge period of approx. 5min30sec. And the capacitor shall be stored under standard conditions thermal to obtain stability,after which measurements shall be made. measurement circuit(测试电路图）		
		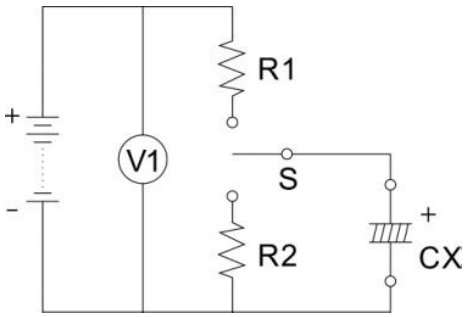	VZ：浪涌电压 Surge voltage	V1：直流电压 DC voltage
			R1：保护电阻（1KΩ） Protective resistor	R2：放电电阻 Discharge resistor
			CX:测试电容 Test capacitor	S:开关 Switch
		SPEC:	1)电容量变化Change in capacitance: ±10%初时值以内Within±10% of the initial value	
			2)损耗正切值tangent of the loss angle: 小于等于初时值The initial specified value	
			3)ESR（equivalent series resistance）：小于等于初时值The initial specified value or less	
			4)漏电流leakage current：小于等于初时值The initial specified value or less	
		电压设定：	RATED VOLTAGE V1 120V	
			SURGE VOLTAGE VZ 138V	
2	端子强度	1）拉力(tensile）	d(mm) / [N] / Duration time	
			0.6 / 10 / 10±2sec(秒）	
		2)抗弯强度（Bending）		
		端子应该在每一个方向上折弯一次，总共两次		
		The terminal shall be subjected to 1 bend in each direction to give a total 2 bends.		
		d(mm)	[N]	
		0.6	5.0（0.51KG)	
		端子没有破损或松动 SPEC: No breaking and loosening of terminal		

3	可焊性 solderability	焊料(Solder）：H60A. H60S or(或)H63A	
		焊接温度(Solder temperature）：245±5℃	
		浸入时间(Immersion time）：3±0.5sec(秒）	
		浸入深度(Immersion depth）：离本体 1.5~2mm	
		熔化：松香在酒精的浓度是25% Flux：25％ by weight of rosin in ethanol	
		从含浸处到顶部，至少有3/4部分覆盖有新焊料	
		SPEC:1)3/4 of the circumference of the surface up to the immersed shall be covered with	
		new solder.	
4	耐焊接热 Resistance to soldering hea	焊料：(Solder）：H60A.H60S or（或）H63A	
		焊接温度(Solder temperature）：260±5℃（or400±10℃）	
		浸入时间(Immersion time）：10±1sec(秒）（or 或 3.5±0.5sec）	
		绝热遮罩板的厚度（Thickness of heat shunt:1.6mm）：1.6mm	
		SPEC:	1):电容量变化Change in capacitance: ±10%初时值以内Within±10%of the initial
			value
			2)损耗正切角tangent of the loss angle:小于等于初始规定值The initial specified
			value or less
			3)ESR（equivalent series resistance）：小于等于初时值The initial specified value
			or less
			4)漏电流leakage current：小于等于初时值The initial specified value or less
5	表示耐溶剂性	标示应清晰可见	
		试剂：异丙醇，浸入时间30±0.5sec	
6	高温高湿 Dampheat, steady state	电容器在温度60±2℃，相对湿度90%到95%条件下存放240±8个小时，然后在标准条件下放1	
		到2小时后进行测量。the capacitor shall be stored at a temperature of 60±2℃ and relative huidity	
		of 90 to 95% for 240±8hours。And then the capacitor shall be subjected to standard atmospheric	
		conditions for 1 to 2hours, after which measurements shall be made	
		measurements shall be made.	
		SPEC:	1)电容量变化Change in capacitance: ±20%初时值以内Within±20%of the initial value
			2)损耗正切角tangent of the loss angle:150%初始值规定以内within ±150%of the
			initial value
			3)ESR（equivalent series resistance）：150%初始值规定以内within ±150%of the
			initial value
			4)漏电流leakage current：小于等于初时值The initial specified value or less
7	高温储存	在+105温度下不外加电压储存，电容器存放1000小时。然后在标准条件下放1到2小时进行测量，并且	
		在测漏电流前，必须满足以上条件。The capacitor shall be stored at +105℃ temperature	
		specified below for 1000 hours.During which time no voltage shall be applied. And then the	
		capacitor shall be sujected to standard atmospheic conditions for 1 to2hours, after which	
		measurements shall be made, Prior to the measurement of leakage current, following conditioning	
		may be made.	
		SPEC:	1)电容量变化Change in capacitance: ±20%初时值以内Within±20%of the initial value
			2)损耗正切角tangent of the loss angle:不大於規範值的150%
			150% or less of initial specified value
			3)ESR（equivalent series resistance）：不大於規範值的150%
			150% or less of initial specified value
			4)漏电流leakage current：小于等于初时值The initial specified value or less

8	耐久性 load life		在+105℃下，电容器施加带纹波电流的额定电压2000小时。在标准条件下放1到2小时后进行测量。The rated voltage with specified ripple current shall be applied continuously to the capacitor at maximum operating temperature +105℃ for 2000 hours. And then the capacitor shall be subjected to standard atmospheric conditions for 1to 2hours, after which measurement shall be made.
		SPEC:	1)电容量变化Change in capacitance: ±20%初时值以内Within±20%of the initial value
			2)损耗正切角tangent of the loss angle:150%初始值规定以内within ±150%of the initial value
			3)ESR（equivalent series resistance）：150%初始值规定以内within ±150%of the initial value
			4)漏电流leakage current：小于等于初时值The initial specified value or less.
9	温度循环测试 Rapid temperature change		电容器要在图1的温度循环要求下保持5个循环，然后在标准条件下放1-2个小时后进行测量。The characteristics of a capacitor kept under the temperature cycle indicated in Figure1 for 5 cycles . And then the capacitor shall be subjected to standard atmospheric conditions for 1to 2hours, after which measurement shall be made
			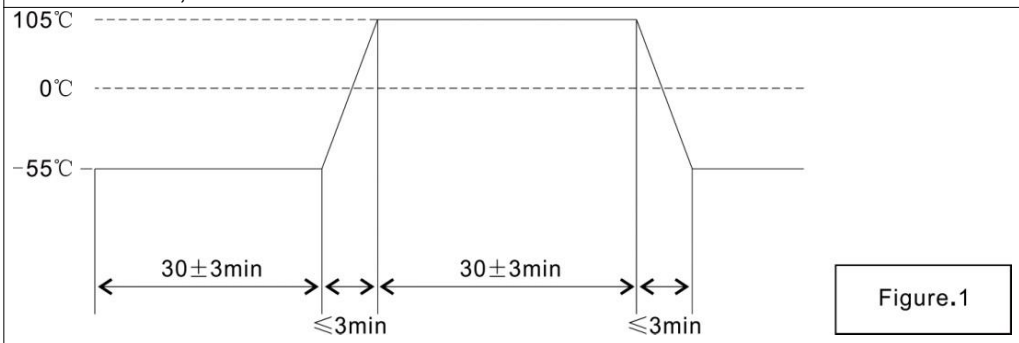
		SPEC:	1)电容量变化Change in capacitance: ±10%初时值以内Within±10%of the initial value
			2)损耗正切角tangent of the loss angle:小于等于初时值The initial specified value or less
			3）ESR（equivalent series resistance）:小于等于初时值The initial specified value or less
			4）漏电流leakage current：小于等于初时值The initial specified value or less.
10	低温测试 Low temperature test		电容器要在温度-55℃条件下存放72±2个小时。然后在标准条件下放1到2个小时进行测试。the capacitor shall be stored at a temperature of -55℃ for 72±2hours。And then the capacitor shall be subjected to standard atmospheric conditions for 1 to 2hours, after which measurements shall be made
		SPEC:	1)电容量变化Change in capacitance: ±10%初时值以内Within±10%of the initial value
			2)损耗正切角tangent of the loss angle:小于等于初时值The initial specified value or less
			3)ESR（equivalent series resistance）:小于等于初时值The initial specified value or less
			4)漏电流leakage current：小于等于初时值The initial specified value or less.
11	充放电测试 Charging and discharging test		在25±5℃的环境下，施加额定工作电压、1000Ω电阻，充电1S，放电1S，循环500000次。Ther capacitor shall be subjected to 500000 cycles application of rated voltage、1000Ω resistance at maximum operating temperature 25±5℃. each consisting of a charge period of 1sec, followed by a discharge period of approx.1sec
		SPEC:	1)电容量变化Change in capacitance: ±10%初时值以内Within±10%of the initial value
			2)损耗正切角tangent of the loss angle:不大於規範值的150% 150% or less of initial specified value
			3)ESR（equivalent series resistance）：不大於規範值的150% 150% or less of initial specified value
			4)漏电流leakage current：小于等于初时值The initial specified value or less.

五：结构图

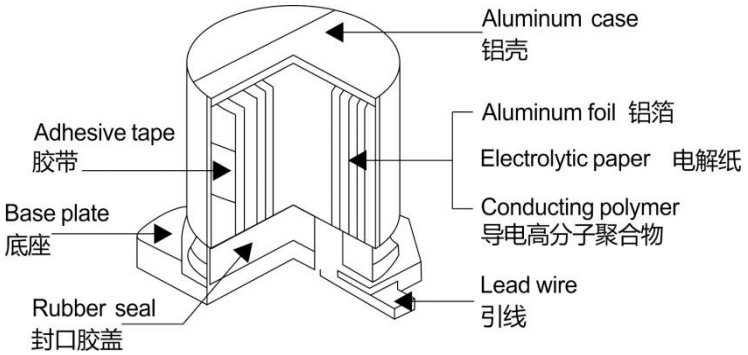

六:标志 Marking

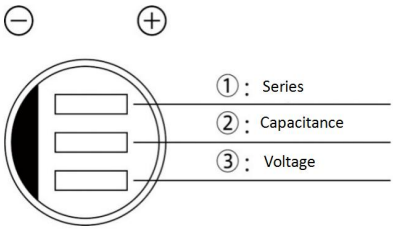

1,	代表系列号Series
2,	代表容量 Rate Capacitance
3,	代表电压 Rate Voltage

七：包装 Packing

包装标签标示 Packing Label Marked

(下面项目应该体现在标签上 The following items shall be marked on the label)

(盘/内盒/外箱 Reel/inside box/outer carton)

系列、额定容值、额定电	Series、Rate Capacitance、Rate Voltage
尺寸	Size
数量	Quantity
物料编码	P/N
批号	LOT Number

Example: 示例:

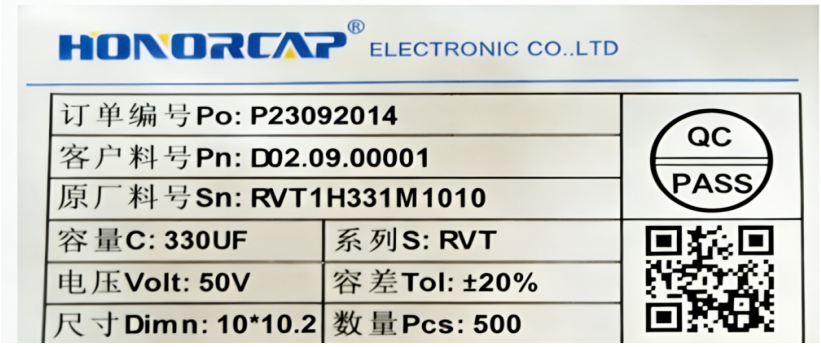

■Reel Dimensions卷盘尺寸

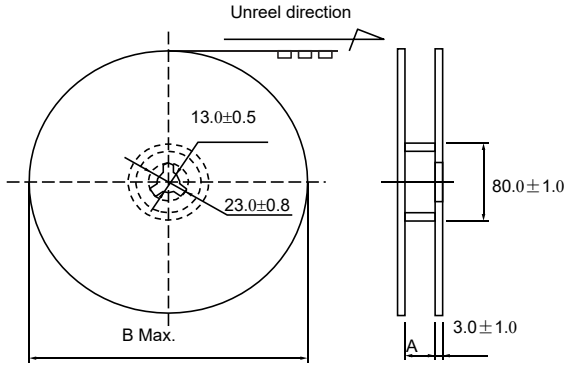

(Unit:mm)

ΦD x L(mm)	5*6	6.3*4.2~4.5	6.3*5.5~8	6.3*9~9.5	8*6.7~12	10*8~12	10*12.5	10*16.5
A	14	17	17	17	25.5	25.5	25.5	25.5
B	382	382	382	382	382	382	382	382

■Packaging Box 包装箱

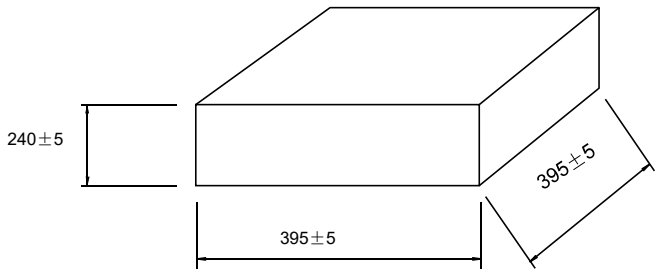

Size ΦD x L(mm) 尺寸	Quantity/Reel (pcs) 数量/卷（個）	Reels/Box 卷盤/箱	Quantity/Carton (pcs) 数量/外箱（個）
5x6	1000	12	12,000
6.3x4.2~4.5	1500	10	15,000
6.3x5.5~8	1000	10	10,000
6.3x9~9.5	750	10	7,500
8x6.7	750	8	6,000
8x8~12	500	8	4,000
10x8~12	500	8	4,000
10x12.5	450	8	3,600
10X16.5	300	8	2,400

*For a small package

♦Please order by minimum package quantity.

♦请以最小包装数量订购。

HONOR-CON P.N	Reel (pcs)	Reels/Box	Carton (pcs)
HMB2M476M1012PZ	450	8	3600

八、	**铝电解电容使用注意事项。Guidelines For Using Aluminum Electrolytic Capacitor.**
	为了使你获得电解电容的最佳性能和延长电解电容的使用寿命，在使用电解电容前，请务必阅读本注意事项。
	Upon using Aluminum Electrolytic Capacitors，please proper handing and observing to following important
	points will insure optimum capacitor performance and long life.
1	直流电解电容是有极性的。DC electrolytic capacitors are polarized.
	确定极性，极性标志在电容器的基体上。以免因极性反可能引起电路短路或电容器损坏，当极性不固定或不确定
	的，使用无极性电容器。注意直流电容器不能使用于交流。Make sure of the polarity. The polarity is marked to
	on the body of the capacitor .Application of the reversed voltage cause a short circuit or damage the capacitor.
	Use bipolar capacitors when the polarity is not determined or unknown. Note that DC electrolytic capacitors
	can not be used for AC application.
2	使用电压不要大于额定电压。Do not apply voltage higher than rated voltage.
	使用电压大于额定电压，漏电流会增大，可能损坏电容器。建议工作电压为额定电压的70%-80%，电容器在建议
	工作电压下使用可以延长电容器的寿命。If a voltage exceeding the rated voltage is applied, the leakage current
	will increase, which damage the capacitor. Recommended working voltage is 70 to 80 percent of tatted voltage.
	Using capacitors at recommended working voltage prolongs capacitor life.
3	不要使用过量纹波电流通过电容器。Do not allow excessive ripple current through the capacitor.
	流过电容器的纹波电流超过许可值，将会引起电容器发热，电容量减少，损耗电容器。通过电容器的纹波电流不
	要大于允许值。The flow of ripple current over permissible ripple current will cause heat of the capacitor, which
	may decrease the capacitance and damage the capacitor. Ripple current on the capacitor must be at or bellow
	allowable level.
4	快速充放点电路中，使用专门设计的电容器。Use specially designed capacitors for the circuits where charge
	and discharge are frequency repeated.
	在经受快速的周期性充放电电路中，电容器可能收到损害，它的寿命因容量下降、温升等原因而缩短，在这种电
	路中，一定要使用专门设计的电容器。In the circuit subjected to rapid charge cycles, capacitors may be
	damaged, its life may be shortened by capacitance decrease, heat rise, ect. Be sure and use special capacitors
	in these applications.
5	工作温度范围。Operating temperature range.
	电容器的特性随工作温度变化而变化，在温度较高的情况下，容量，漏电流增大，损耗减少；在低温情况下，容量
	和漏电流下降，损耗增大。电容器在较低温度下使用会确保延长寿命。The characteristics of capacitors change
	with the operating temperature. The capacitance and leakage current increase and tgδ decrease at higher
	temperatures. The capacitance and leakage current decrease and tgδ at increase lower temperature. Usage at
	lower temperature will ensure longer life.
6	核对工作频率。Check operating frequency.
	电解电容器的容量通常是在100HZ或者120HZ下测得的。然而要记住容量随频率的升高而下降，tan δ 随频率的升高
	而增大，并使周围温度升高。The capacitance of electrolytic capacitors is usually measured at 100Hz or 120Hz.
	However, remember that capacitance decrease and tgδ increase as the applied frequency becomes higher
	whereas the ambient temperature becomes higher.
7	长时间存放的电容器，在使用前加额定直流电压处理。
	Apply rated DC voltage treatment to the capacitors which have been stored for a long time.
	长时间的存放，实际对电容器的容量和tan δ 没有多大的影响，然而往往会使漏电流增大，耐压降低。长时间存放
	后的电容器处理，首先逐渐施加直流电压至额定电压，然后再使用。Long periods of storage have virtually no
	effect on a capacitor’s capacitance and tgδ. Such periods tend however, to increase leakage current and
	decrease withstand voltage. After removing capacitors from long-duration storage, first apply a gradually
	increasing DC voltage to rated voltage and then use them.
8	固液混合型电容器的外殼为镀膜外壳,与极性是绝缘的。The Case of Conductive Polymer Aluminum Solid
	Capacitor is Resin coated case which is insulated with the terminals.

9	The capacitor's case and cathode terminal connect through the electrolyte. If the case is to be completely
	insulated, that insulation must be at the capacitor's mounting point.
10	电容器的端子或者引线上不要施加过大的力。
	Do not apply excessive force to the terminals and leads.
	过大的力施加到端子和引线上，可能引起引线的断裂或端子分裂，转而会引起内部链接的破坏
	The excessive strong force applied to the terminals and lead wires may cause leads to break or
	terminals to separate and, in turn, cause the internal contact to fail.
九、	**Recommended Conditions for Reflow Soldering 推荐回流焊条件**
	●Conductive Polymer Aluminum Hybrid Electrolytic Capacitors
	贴片式导电性高分子混合型铝电解电容器
1	（1）预热应在+100℃~180℃及120秒内完成。Preheating shall be done at +100℃~180℃ and for 120 seconds.
	（2）峰值温度在+260℃或以下：回流焊次数只能是1次。Peak temperature +260℃ or below:Reflow shall be done 1 cycle only.
	（3）峰值温度在+250℃或以下：回流焊次数最多是2次。Peak temperature +250℃ or below:Reflow shall be done within 2 cycles.
	（4）请确保在第1次和第2次之间的产品有足够的冷却时间。Please make sure that the parts have enough cooling time between the first and second soldering process.
	（5）如使用条件超出最大值，请于我们联系。Please contact us if your condition is over the maximum.
2	**Classification Reflow Profile 回流焊曲线图**

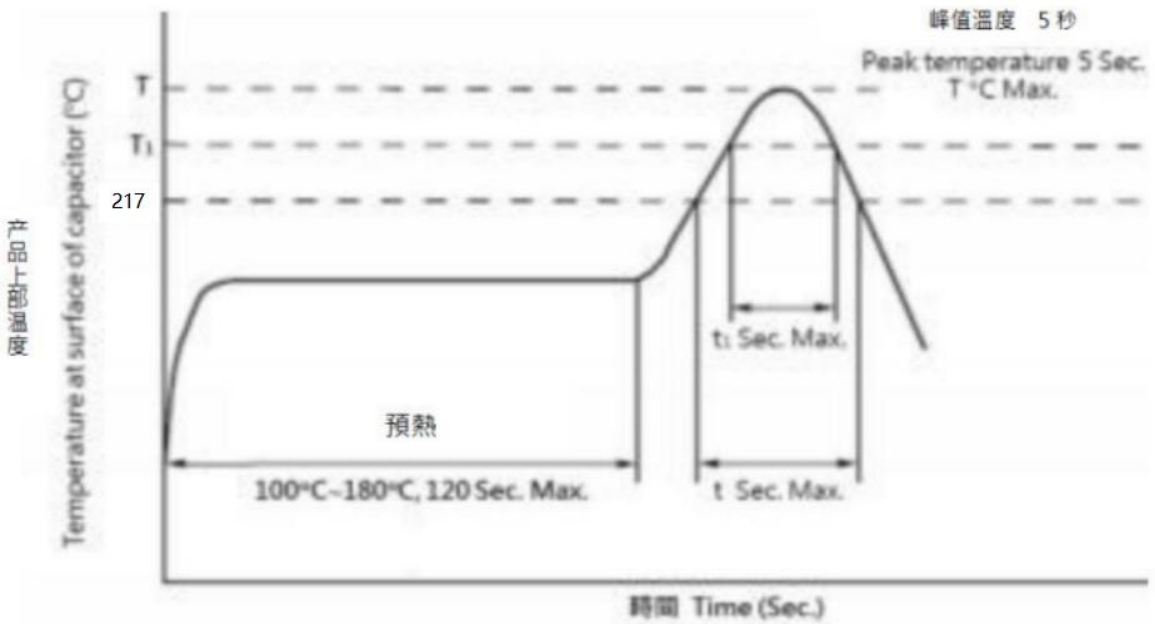

T℃	t1 ≥230℃	t ≥217℃	≥200℃	过回流焊次数
250	40	50	60	2
260	40	50	60	1

3	**Precautions for Reflow Soldering回流焊注意事项**
	回流焊会降低制品额定静电容量，应确认回流焊条件是否满足建议回流焊之规范。
	Reflow soldering will reduce the rated electrostatic capacity of the product. Ensure that reflow soldering conditions
	虽然实际的回流焊条件变更仍依据各项回流焊的焊接方法，请注意制品铝壳底部之最高温度及电极端子不可超过最高温度。Although the actual reflow conditions are changed according to the reflow soldering methods, please note that the maximum temperature of the bottom of the aluminum shell and the electrode terminal shall not exceed the maximum temperature.