| NO. | ECN NO. | DESCRIPTION | DATE |
|---|---|---|---|
| | | | |

# 客户图

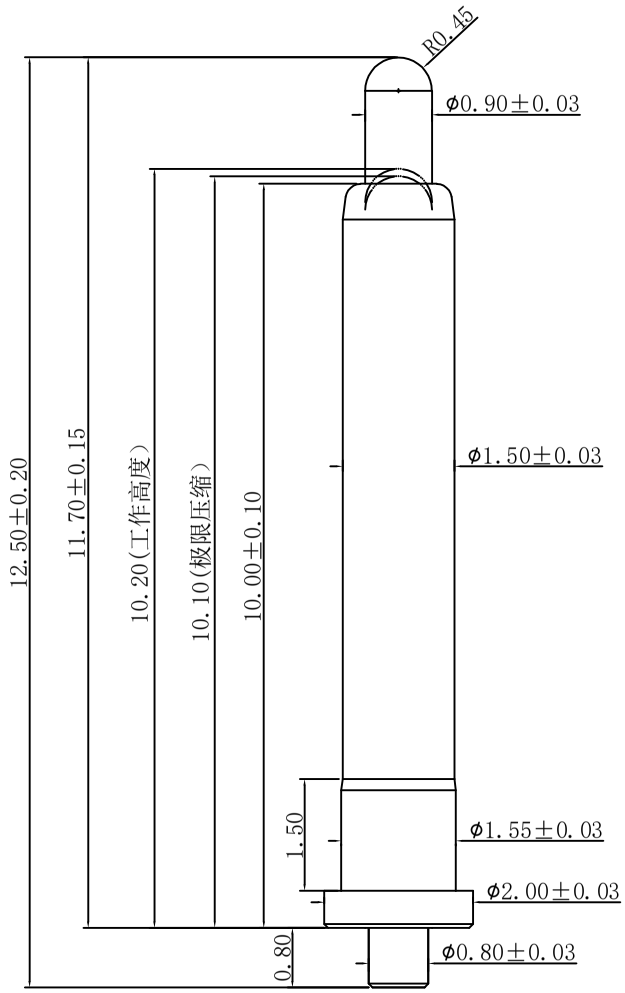


Note:

1: Material(材料）:
Barrel: Brass C3604 (针管：黄铜 C3604)
Plunger: Brass C3604 (针头：黄铜 C3604)
Spring: SUS304 (弹簧: SUS304)

2: Plating(电镀）:
Barrel: 5u' Au over 50~80u' Ni(针管：镀金5u'，镍底50~80u'。)
Plunger:5u' Au over 50~80'u Ni（针头：镀金5u'，镍底50~80u'。)
Spring: No plated (弹簧：不电镀)

3: Electrical(电气特性）:
Rated Current & Voltage: DC 12V;1A (额定电压&电流: 直流12V,1A)
Contact Resistance: 50 mohm Max. at working height.
接触电阻：最大50毫欧（在工作高度状态下）

4: Mechanical(机械性能）:
Force:20g±5g at working height. (20g±5g 在工作高度）。
Durability: 10.000 cycles(min)（寿命：10000次）

5: WorkTemperture(工作环境)：
Withstanding Higt Temperature: 280℃
Operational Temperature: -40℃~ +85℃

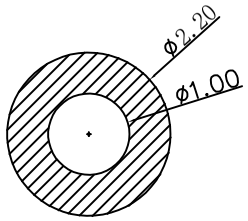


RECOMMENDED PCB LAYOUT


深圳市鑫扬泽电子有限公司
HTTP://WWW.XYZPOGOPIN.COM
TEL:0755-28773277 FAX:0755-28891353


| | | | | | | | |
|---|---|---|---|---|---|---|---|
| SCALE: | N/A | UNIT | mm | THE UNMARKED TOLERANCE ARE AS BELOW : | DESIGNED BY: | DWG. NO. | YZP0819-20125-01 |
| SHEET: | 1 of 1 | PROJECTION | | LENGTH: X.XX ±0.05mm, X.X ±0.10mm, X. ±0.20mm; ANGLE: X.XX ±0.50°, X.X ±1.00°, X. ±2.00° | CHECKED BY: | TITLE: | Pogo pin 连接器 |
| DATE: | 2023.8.10 | VER. | A.0 | | APPROVED BY: | | |