NO.	ECN NO.	DESCRIPTION	DATE

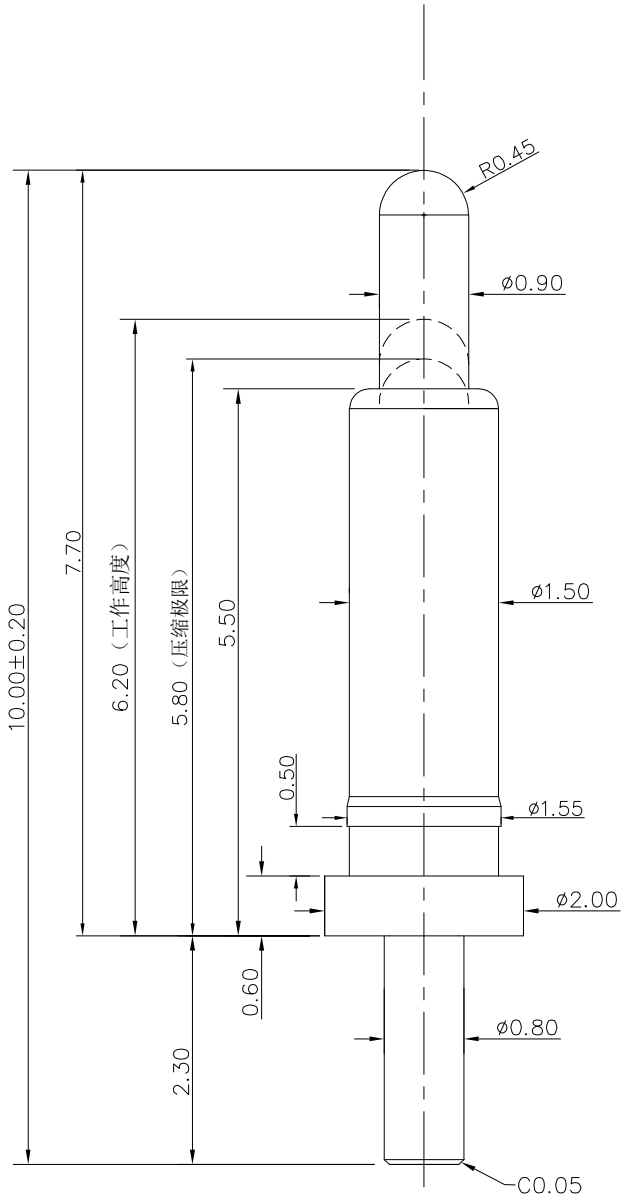

Note:

1: Material(材料）:
   Barrel: Brass C3604 (针管：黄铜 C3604)
   Plunger: Brass C3604 (针头：黄铜 C3604)
   Spring: SUS304 (弹簧: SUS304)
2: Plating(电镀）:
   Barrel: 3u' Au over 50~80u' Ni(针管：镀金3u'，镍底50~80u'。)
   Plunger: 3u' Au over 50~80'u Ni（针头：镀金3u'，镍底50~80u'。)
   Spring: Gold plated (弹簧：镀金)
3: Electrical(电气特性）:
   Rated Current & Voltage: DC 12V;3A (额定电压&电流: 直流12,3A)
   Contact Resistance: 50 mohm Max. at working height.
   接触电阻：最大50毫欧（在工作高度状态下）
4: Mechanical(机械性能）:
   Force: 120g±20% at working height. (120g±20% 在工作高度）。
   Full stroke: 2.50mm (全行程：2.50mm)
   Durability: 10.000 cycles(min)（寿命：10000次）
5: WorkTemperture(工作环境):
   Withstanding Higt Temperature: 280℃
   Operational Temperature: －20℃～ ＋70℃

深圳市鑫扬泽电子有限公司

TEL:0755-28773277 FAX:0755-28891353

SCALE:	N/A	UNIT	mm
SHEET:	1 of 1	PROJECTION	
DATE:	2022.10.30	VER.	A.0

THE UNMARKED TOLERANCE ARE AS BELOW :

LENGTH		ANGLE	
X.XX	±0.05mm	X.XX	±0.50°
X.X	±0.10mm	X.X	±1.00°
X.	±0.20mm	X.	±2.00°

DESIGNED BY:		DWG. NO.	YZP0711-20100-01
CHECKED BY:		TITLE:	成品图
APPROVED BY:			