编码(Coding)：JK/JXC260323002

南京时恒电子科技有限公司

Nanjing Shiheng Electronics Co.,Ltd.

产品承认书

APPROVAL SHEET

客户名称 CUSTOMER：	
产品名称 PART NAME：	MF72 功率型 NTC 热敏电阻器 MF72 Power NTC Thermistor
产品型号 PART NUMBER：	MF72 2.5D11
版次 REV.NO：	C0
日期 DATE：	2026-03-23

南京时恒电子科技有限公司
NANJING SHIHENG ELECTRONICS CO.,LTD.
地址：南京市江宁区湖熟镇金阳路 18 号
Address: No.18 Jinyang Road Hushu Town Jiangning District Nanjing China
邮编 Postcode：211121
TEL: 025-52121868
Http: //www.shiheng.com.cn E-MAIL: sales@shiheng.com.cn

变更登记表

REVISED RECORD SHEET

版次 REV. NO	变更日期 REV.DATE	变更内容 CHANGE CONTENT	申请人 APPLICANT	批准人 APPROVED
A0	2015/10/11	版本制定。 Version formulation	鞠晓丽	李少媛
B0	2022/4/1	更新规格书版本格式，增加版次管控，细化规格纸。 Update for version form of data sheet, add to management and control for number of edition, refine to PN and draw.	吴迎丽	李少媛
C0	2025/12/01	更新规格书版本格式，去掉：产品图纸此一页的变更履历表 Update for version form of data sheet, Remove: Change history table on this page of the product drawing	刘星月	李少媛

1、产品型号说明 Product model specification

MF72 2.5 D 11

① ② ③ ④

① ：时恒品牌

② MF72：功率型 NTC 热敏电阻

③ 2.5：25℃的零功率电阻值 2.5Ω

④ 11：本体直径 D11

2、电气性能 Electrical Characteristics

No.	项目 Item	符号 Symbol	测试条件 Test conditions	单位 Unit	性能要求 Requirements
2.1	25℃的零功率电阻值 Zero Power Resistance at 25℃	R_{25}	Ta=25±0.5℃ (测试功率≤0.1mW 空气中测试) (Test Power≤0.1mW，in air)	Ω	2.5Ω ±20%
2.2	B 值 B-value	$B_{25/50}$	B=[(Ta×Tb)/(Tb-Ta)]×ln(Ra/Rb) Ta=25±0.01℃ Tb=50±0.01℃	K	2600K±10%
2.3	最大稳态电流 Max steady current	I max	/	A	5
2.4	最大允许容值 Max allowable capacity value	C_T	240Vac	μF	470
2.5	耗散系数 Thermal dissipation Coefficient	δ	静止空气中 In still air	mW/℃	约 13
2.6	时间常数 Thermal time constant	τ	静止空气中 In still air	sec	约 43
2.7	耐电压 withstand voltage	/	500V/AC 1min	/	无击穿或飞弧 No breakthrough and flash over
2.8	绝缘电阻 Insulation resistance	/	500V/DC 1min	MΩ	≥500
2.9	工作温度范围 Operating temperature range	/	/	℃	-40 ~170
2.10	最大额定功率 Maximum rated power	Pmax	/	W	3
2.11	阻温特性 R&T-table	/	/	/	见附图 1 see attachment1
2.12	伏安曲线 curve of voltage and current	/	/	/	见附图 2 see attachment2

3、产品图纸 Product drawing

产品图纸 Product drawing		客户确认 Customer confirm	客户名称 Customer：			
			确认 Confirm		日期 DATE	
产品型号 MODEL NO.	MF72 2.5D11		审核 Approve:		日期 DATE	

尺寸 Dimensions： （Unit：mm）

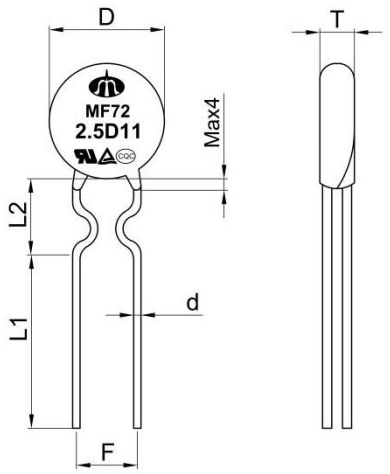

D	L1	L2	F	T	d
Max12	3.5±0.5	5±2	7.5±0.5	Max5.5	0.8±0.05

技术要求 Technical requirements：

1) 零功率阻值：R_{25}：2.5Ω±20% (Zero Power Resistance: R_{25}：2.5Ω±20%)；
2) $B_{25/50}$ 数值：2600K±10% (B-value:$B_{25/50}$: 2600K±10%)；
3) 线材：镀锡铜包钢线 (Tinned copper clad steel wire)；
4) 封装：绿色硅树脂 (Green silicon resin)；
5) 符合 RoHS 环保要求 (Meet environmental protection requirements:RoHS)。

4、可靠性 Reliability

No.	项目 Test Item	试验标准 Test Standard	试验条件及方法 Test Conditions / Methods	性能要求 Acceptance Criteria
4.1	引出端强度 Terminal strength	IEC60068-2-21	线径 lead diameter(mm) 拉力（N） Pull strength(N) 0.5<d≤0.8 10 0.8<d≤1.25 20 时间:10±1 秒 time: 10±1 sec	无可见性损伤 No obvious damage $\|\Delta R_{25}/R_{25}\|\leqslant 20\%$
4.2	可焊性 Solder ability	IEC60068-2-20	温度 245℃±5℃时间 2-3 秒 temperature: 245℃±5℃ for 2-3 sec	着锡面积≥95% Coverage area ≥ 95%.
4.3	耐焊接热 Withstand weiling temp	IEC60068-2-20	锡锅温度:260℃±5℃，浸入深度距电阻体 6mm，时间 10±1 秒 Temperature of tin pot: 260℃±5℃, insert deepth from body of resistance 6mm, time 10±1 senconds	无可见性损伤 No obvious damage $\|\Delta R_{25}/R_{25}\|\leqslant 20\%$
4.4	稳态湿热 Steady humidity and heat	IEC60068-2-78	温度:40℃±2℃，湿度:93%RH±2%RH，时间：1000 小时 Temp: 40℃±2℃, humidity: 93%RH±2%RH, Time: 1000 hrs	无可见性损伤 No obvious damage $\|\Delta R_{25}/R_{25}\|\leqslant 20\%$
4.5	温度快速变化 Rapid changes in temperature	IEC60068-2-14	-40℃ 30min→25℃ 5min→170℃ 30min→25℃ 5min, 5 cycles	无可见性损伤 No obvious damage $\|\Delta R_{25}/R_{25}\|\leqslant 20\%$
4.6	高温储存 High temperature storage	IEC60068-2-2	温度：170℃±2℃ 时间：1000 小时 Temp: 170℃±2℃, Time: 1000 hrs	无可见性损伤 No obvious damage $\|\Delta R_{25}/R_{25}\|\leqslant 20\%$
4.7	最大稳态电流耐久性 Durability for max steady current	IEC60539-1	在室温下热敏电阻器持续施加最大稳态电。 1000h±24h Impose sustained max steady current upon the thermistor at ambient temperature.	无可见性损伤 No obvious damage $\|\Delta R_{25}/R_{25}\|\leqslant 20\%$
4.8	最大电容量 Max capacity valume	IEC60539-1	施加最大允许电容量，间歇地闭合 50ms、断开 5 倍的热时间常数为一个循环，对热敏电阻器施加 1000 次循环。 Impose1000 cycles to the thermistor. take Max capacity value, intermittent switch 50ms,cut 5times thermal time constant as one cycle.	无可见性损伤 No obvious damage $\|\Delta R_{25}/R_{25}\|\leqslant 20\%$

▲注：1）稳态湿热及温度快速变化试验结束后，样品需在常温环境下静置 2 小时后再做性能测试；
▲Note：1) After the test of steady-state humid heat and rapid temperature change, the sample should be kept for 2 hours at room temperature before performance test；

2）高温存储结束后，需随测试环境自然恢复至常温，再取出做性能测试。

2) After the test of high-temperature storage is complete, and then take it out for performance test when the test environment naturally regain to normal temperature.

5、推荐波峰焊曲线 Recommended wave soldering profile

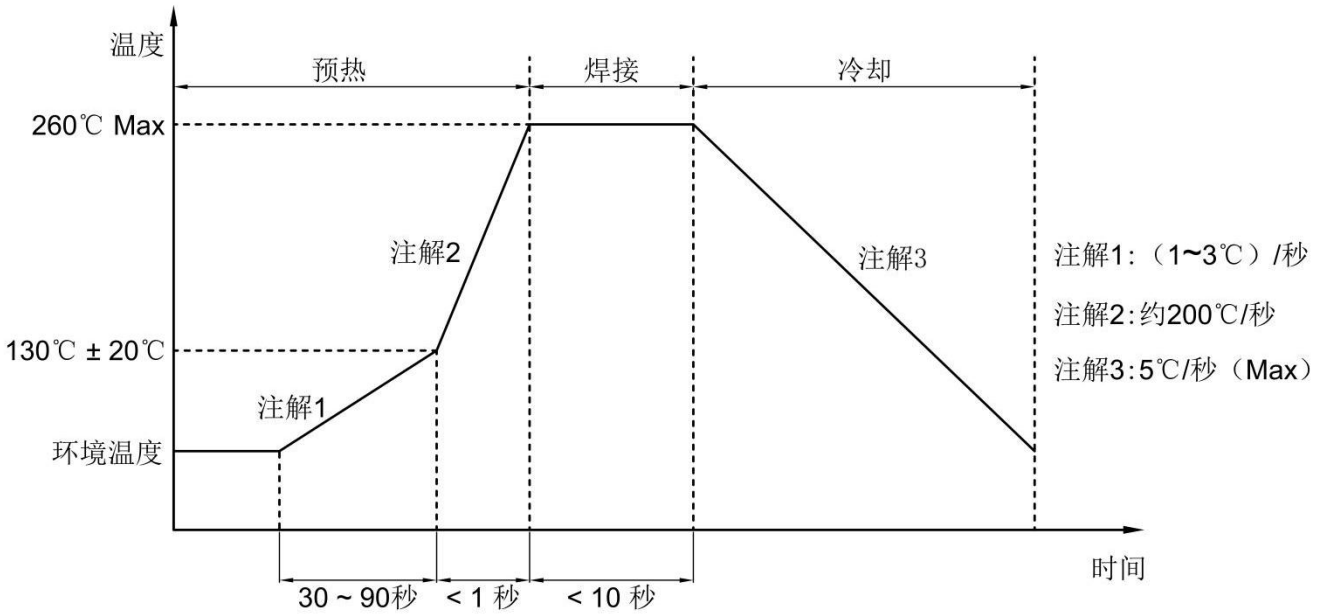

6、降电流曲线 Drop current curve

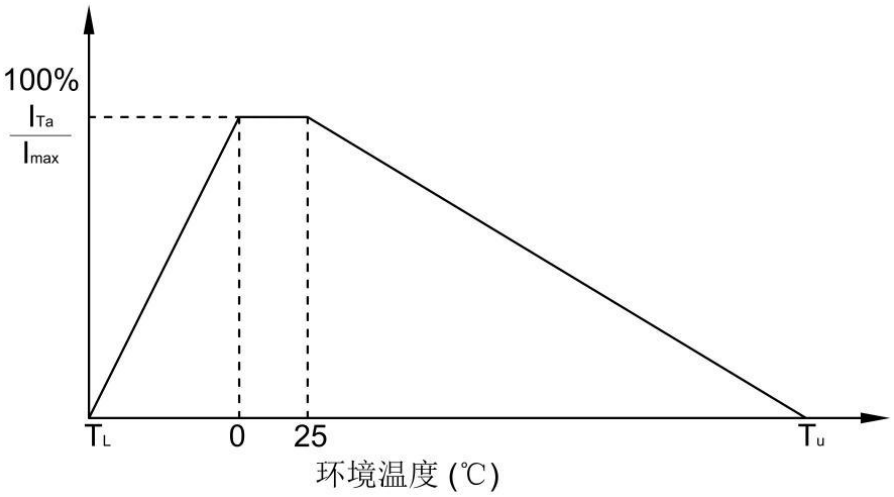

备注：TL=最低温度（℃） Tu=最低温度（℃）

例如:
环境温度(T_a) = －10℃
最低工作温度 (T_L) = －40℃

$$I_{Ta} = \frac{T_L - T_a}{T_L - 0} \times I_{max} = 75\% I_{max}$$

环境温度 (T_a) = 55℃
最高工作温度 (T_u) = 200℃

$$I_{Ta} = \frac{T_u - T_a}{T_u - 25} \times I_{max} = 83\% I_{max}$$

Example:
Ambient temperature (T_a) = －10℃
Minimum operating temperature (T_L) = －40℃

$$I_{Ta} = \frac{T_L - T_a}{T_L - 0} \times I_{max} = 75\% I_{max}$$

Ambient temperature (T_a) = 55℃
Maximum operating temperature (T_u) = 200℃

$$I_{Ta} = \frac{T_u - T_a}{T_u - 25} \times I_{max} = 83\% I_{max}$$

7、产品包装 Product packaging

7.1 包装方式 Packing Type

☑ 散装方式 Bulk Type ☐ 编编带方式 Reel Type ☐ 托盘包装方式 pallet

7.2 包装规格 Packing specification

No.	包装规格 Packing specification	包装材料、尺寸 Packing material, size	产品数量 Quantity
1	包装袋 Packing bag	自封口袋 (self sealing bag) W×H=11cm×12cm 或 15cm×23cm	
2	编编带包装盒 reel packing box	包装盒 packing box W×G×H=335mm×240mm×50mm	

8、安装&使用注意事项 Installation & Use precautions

8.1 本产品的用途：抑制浪涌电流；
purpose of product: current limitation;
8.2 烙铁焊接时，焊接处距包封头部距离至少 2mm，焊接温度应低于 360℃，焊接时间＜3ses；
When welded by soldering iron, weld spot should be 2mm at least from head, weld temperature should be under 360℃, time＜3ses;
8.3 储存温度：-10℃ ～ 40℃；储存湿度：≤75% RH；
storage temp: -10℃ ～ 40℃; storage humidity: ≤75% RH;
8.4 避免存放在具有腐蚀性气体及光照的环境下；
To avoid of leaving with such environment as corrosive gases and illumination;
8.5 包装打开后需重新密封保存，贮存期 1 年，超过贮存期，可按本标准规定的项目重新检验，如符合要求仍可使用。
The packing need to be resealed since opened, storage period 1 year once valid, it should be retest according to regulated of criterion and can be still used if meet the requirement.

9、产品认证 Product certification

No.	项目 Projects	产品认证 Product certification
9.1	质量管理体系认证 Quality Management System Certification	ISO9001:2015
		IATF16949：2016
9.2	环境管理体系认证 Environmental Management System Certification	ISO14001:2015
9.3	知识产权管理体系认证 Intellectual Property Management System Certification	GB/T29490-2013
9.4	环保检测报告 Environmental test report	RoHS 2.0
9.5	CQC 认证（CQC04001010556） CQC certificate（CQC04001010556）	CQC

9.6	TUV 认证（R50245892） TUV certificate（R50245892）	
9.7	UL/cUL 认证（E241319） UL/cUL certificate（E241319）	
9.8	江苏省高新技术产品认证 High-tech product certificate in Jiangsu Province	

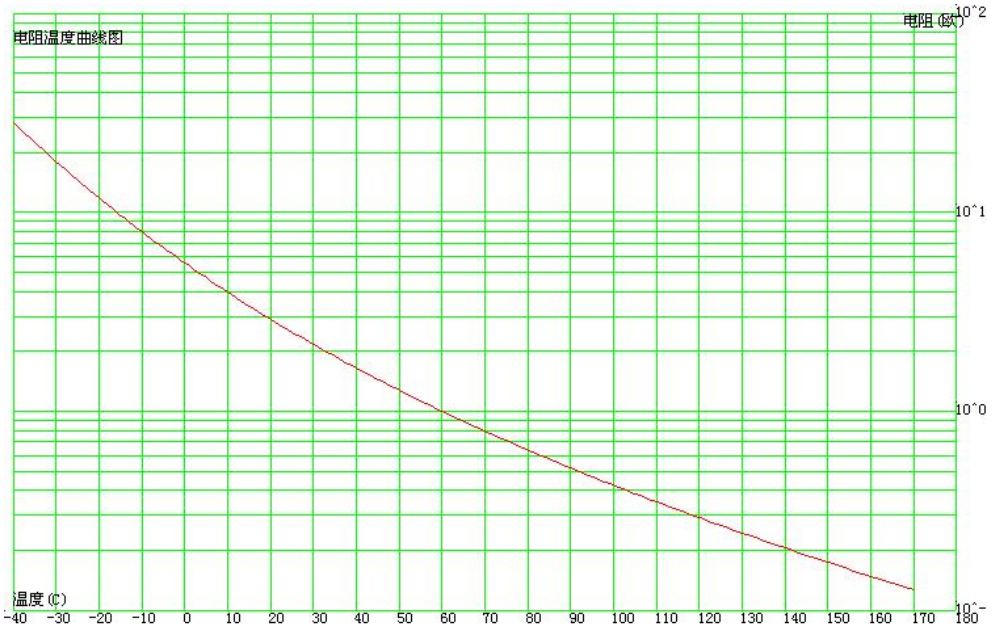

附：图 1

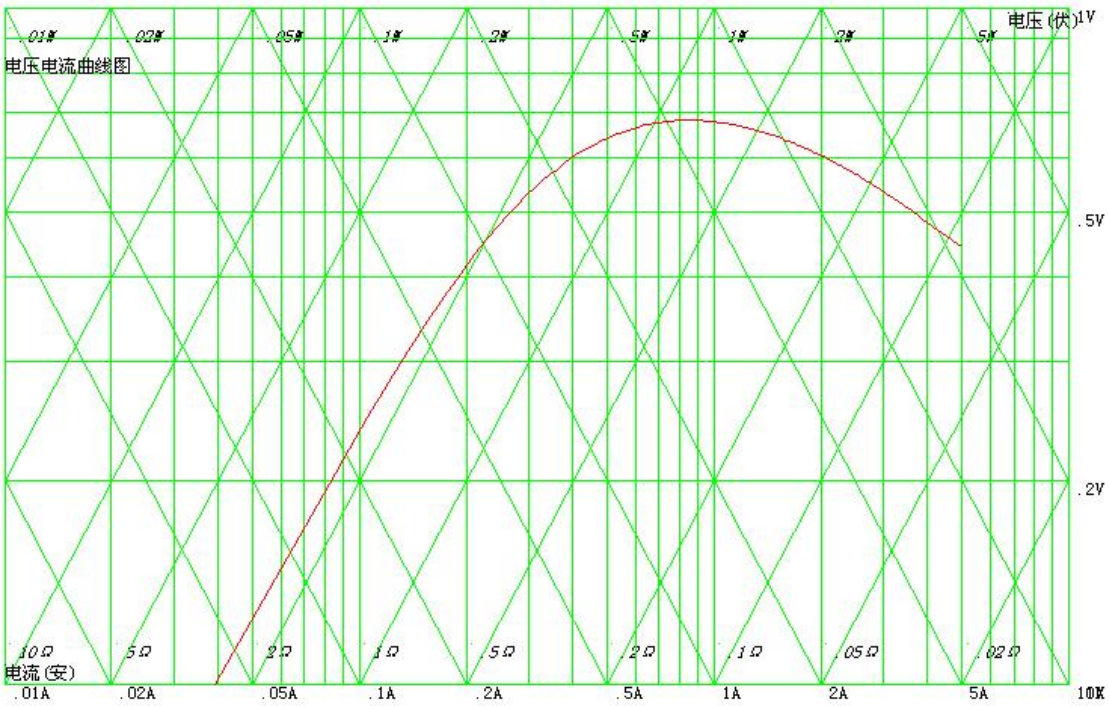

附：图 2

硅树脂包封涂料材质说明

Silicone encapsulating coating material description

1、根据功率型 NTC 热敏电阻器的工作原理和使用特性，我司生产的功率型 NTC 热敏电阻器采用了硅树脂做为包封涂料，此树脂具有耐温高（达到 300℃以上）、散热速度快、绝缘效果好的优点，是目前功率型 NTC 热敏电阻器所能选用的最佳包封涂料。According to the working principle and use characteristics of the power NTC thermistor, the power NTC thermistor produced by our company uses silicone resin as the encapsulation coating. This resin has the following advantages: high temperature resistance (up to 300 ℃ above), fast heat dissipation and good insulation effect, it is the best encapsulation coating for power NTC thermistors at present.

2、由于硅树脂的材料特性，硅树脂表面较为粗糙（易于散热），其表面由于产品之间相互摩擦易产生摩擦痕迹，相关试验证明，此种摩痕并不会影响产品的性能特性，而且这种摩痕可以人工擦除。Due to the material properties of silicone resin, the surface of silicone resin is relatively rough (easy to dissipate heat), and its surface is prone to friction marks due to mutual friction between products. Relevant tests have proved that such rubbing marks do not affect the performance characteristics of the product, and such rubbing marks can be manually erased.

3、此包封涂料材质坚固，但是质地较脆、韧性较差，当产品受到不当外力作用时，如搬运重摔、将引脚向外掰、PCB 板孔径与热敏电阻器脚距不匹配时引线的不当拽掰或引线弯脚等都有可能造成产品引脚处包封涂料的裂缝和碎裂，在现有技术条件下，很难完全避免这种外观瑕疵，值得庆幸的是，针对此种引脚处的轻微裂缝和碎裂现象，我司经过多次反复相关试验，证明完全不会影响产品的性能特性和可靠性指标。The material of this encapsulation coating is firm, but the texture is brittle and the toughness is poor. When the product is subjected to improper external force, such as heavy handling, breaking the pins outward, and the PCB board aperture does not match the thermistor pitch Inappropriate pulling of the lead or bending of the lead may cause cracks and cracks in the encapsulating paint at the product lead. Under the existing technical conditions, it is difficult to completely avoid such appearance defects. Fortunately, for The slight cracks and chipping phenomena at the pins have been proved by our company after many repeated tests, which have proved that the performance characteristics and reliability indicators of the products will not be affected at all.

综上所述，不论是产品硅树脂表面的摩痕还是产品引脚处的轻微裂缝和碎裂，均不会影响产品的性能特性，敬请客户放心使用！To sum up, whether it is the friction marks on the surface of the silicone resin of the product or the slight cracks and cracks at the pins of the product, it will not affect the performance characteristics of the product, please feel free to use it!