NSD1624x

High Reliability, Half Bridge Gate Driver

Datasheet (EN) V1.1

Product Overview

NSD1624x is a high voltage, high side-low side gate driver having capability to deliver 4A source and 6A sink current to drive power MOSFETs or IGBTs.

The high side section is designed to endure a DC voltage over 1200V with innovative and proven isolation technology. NSD1624x offers best in class propagation delay, low quiescent current, high negative and dv/dt immunity on SW pin.

Both high side and low side driver section work from 10V to 20V supply voltages having independent under voltage lockout (UVLO) protection. NSD1624x has two independent input pins (HIN and LIN) which are compatible for TTL and CMOS logic. NSD1624x is available in LGA10, SOP8, and SOP14 package with operating temperature range from -40°C to 125°C.

Key Features

- High voltage range: Up to 1200V (SOP14) / 700V (SOP8)
- Less than 35ns Propagation Delay
- Less than 7ns Delay Matching
- 4A Source / 6A Sink Currents
- High Negative and Transient Immunity up to 150V/ns on SW Pin
- Gate Drive Supply Voltage from 10V to 20V
- TTL and CMOS Compatible Input Logic
- UVLO Protection for High-side and Low-side Drivers
- Separated Grounds for Logic (SGND) and Driver in SOP14 package
- High and Low Voltage Pins Separated for Maximum Creepage and Clearance in SOP14 Package
- RoHS & REACH Compliant
- Lead-free component, suitable for lead-free soldering profile: 260°C

Applications

- Half-bridge, full-bridge, and LLC converters.
- High density switching power supplies for Server, Telecom and Industrial
- Solar inverters, Motor controls and EV charges

Device Information

Part Number	Package	Body Size
NSD1624-DLAJR	LGA10	4.0 mm × 4.0 mm x 0.85mm
NSD1624-DSPKR	SOP14	8.6 mm × 3.9 mm x 1.75mm
NSD1624-DSPR	SOP8	4.9 mm × 3.9 mm x 1.75mm
NSD16241-DSPKR	SOP14	8.6 mm × 3.9 mm x 1.75mm
NSD16241-DSPR	SOP8	4.9 mm × 3.9 mm x 1.75mm
NSD16242-DSPR	SOP8	4.9 mm × 3.9 mm x 1.75mm

Functional Block Diagram

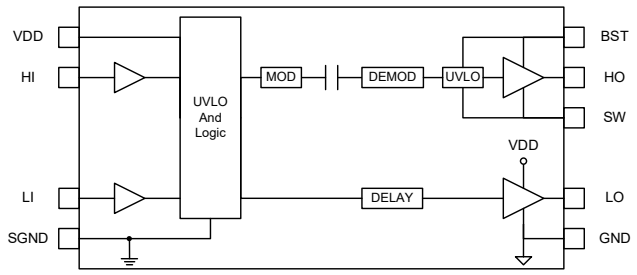

NSD1624x Block Diagram

Copyright © 2023, NOVOSENSE

1 INDEX

1. PIN CONFIGURATION AND FUNCTIONS 3
2. ABSOLUTE MAXIMUM RATINGS 5
3. RECOMMENDED OPERATING CONDITIONS 6
4. THERMAL INFORMATION 6
5. SPECIFICATIONS 7
   - 5.1. Electrical Characteristics 7
   - 5.2. Switching Characteristics 8
   - 5.3. Typical Performance Characteristics 8
   - 5.4. Parameter Measurement Information 11
6. GENERAL DESCRIPTION 11
   - 6.1. Overview 11
   - 6.2. Functional Block Diagram 12
   - 6.3. Feature Description 12
     - *6.3.1 Under Voltage Lock Out (UVLO) 12*
     - *6.3.2 Input Stage 12*
     - *6.3.3 Input Table 13*
     - *6.3.4 Output Stage 13*
7. APPLICATION NOTE 13
   - 7.1. Typical Application Circuit 13
   - 7.2. ESD Structure 14
   - 7.3. Layout Recommendations 14
8. PACKAGE INFORMATION 15
9. ORDERING INFORMATION 17
10. TAPE AND REEL INFORMATION 17
11. REVISION HISTORY 20

Copyright © 2023, NOVOSENSE

1. Pin Configuration and Functions

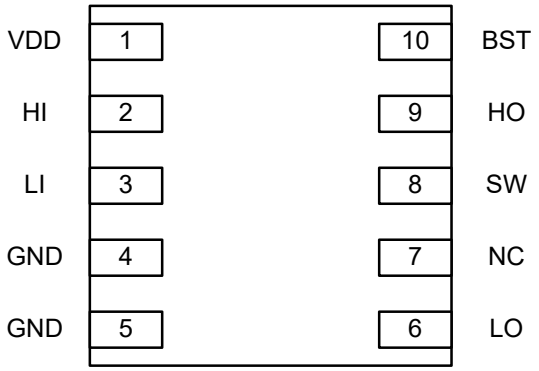

Figure 1.1 NSD1624 LGA10 Package

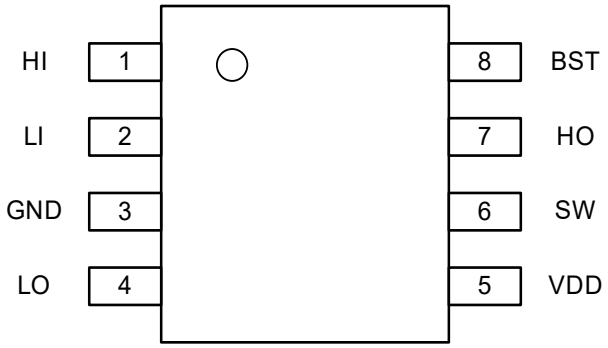

Figure 1.2 NSD1624 SOP8 Package

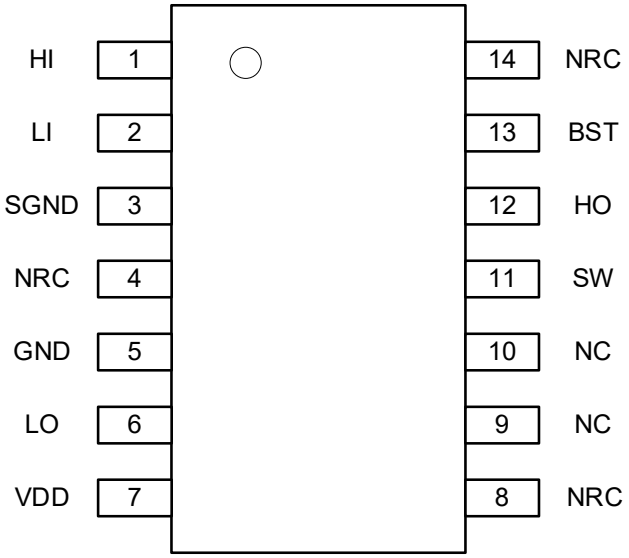

Figure 1.3 NSD1624 SOP14 Package

Copyright © 2023, NOVOSENSE

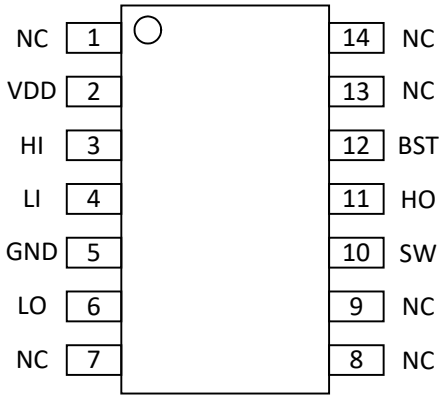

Figure 1.4 NSD16241 SOP14 Package

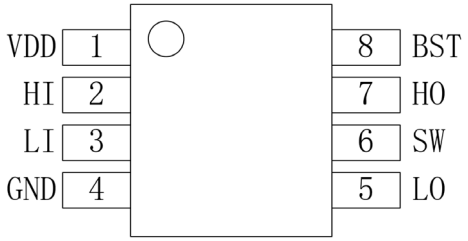

Figure 1.5 NSD16241 SOP8 Package

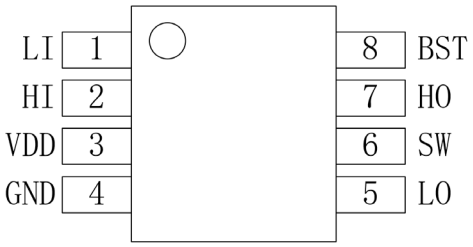

Figure 1.6 NSD16242 SOP8 Package

Copyright © 2023, NOVOSENSE

Table 1.1 NSD1624x Pin Configuration and Description

PIN NO.						SYMBOL	FUNCTION
LGA10 (NSD1624)	SOP8 (NSD1624)	SOP14 (NSD1624)	SOP14 (NSD16241)	SOP8 (NSD16241)	SOP8 (NSD16242)		
4, 5	3	5	5	4	4	GND	Power Ground, return for low-side driver.
2	1	1	3	2	2	HI	Logic input for high-side driver.
3	2	2	4	3	1	LI	Logic input for low-side driver.
1	5	7	2	1	3	VDD	Power supply for the input logic part and low-side driver.
6	4	6	6	5	5	LO	Low-side driver output.
9	7	12	11	7	7	HO	High-side driver output.
10	8	13	12	8	8	BST	High-side floating supply.
8	6	11	10	6	6	SW	High-side supply return.
/	/	3	/	/	/	SGND	Signal ground, reference for input
7	/	9,10	1, 7, 8, 9, 13, 14	/	/	NC	Floating internally
/	/	4	/	/	/	NRC[1)]	Not recommend connected on PCB
/	/	8	/	/	/	NRC[2)]	Not recommend connected on PCB
/	/	14	/	/	/	NRC[3)]	Not recommend connected on PCB

1) It is not insulated with SGND internally.

2) It is not insulated with GND internally.

3) It is not insulated with SW internally.

2. Absolute Maximum Ratings

Parameters	Symbol	Min	Max	Unit
Input Supply Voltage	V_{VDD}	-0.3	24	V
High side SW pin voltage (SOP14)	V_{SW}	-1200	1200	V
High side SW pin voltage (LGA&SOP8)	V_{SW}	-700	700	V
High side floating voltage	V_{BST} - V_{SW}	-0.3	24	V
High side output voltage	V_{HO}	V_{SW}-0.3	V_{BST}+0.3	V
	V_{HO}, Transient for 100ns	V_{SW}-2	V_{BST}+0.3	V
Low side output voltage	V_{LO}	-0.3	V_{VDD}+0.3	V
	V_{LO}, Transient for 100ns	-2	V_{VDD}+0.3	V
Signal ground to GND[1)]	V_{SGND}	-5	5	V

Copyright © 2023, NOVOSENSE

Input voltage to Signal ground	V_{HI}, V_{LI}, V_{VDD}	V_{SGND} -0.3	V_{SGND}+20	V
Junction Temperature	T_J	-40	150	°C
Storage Temperature	T_{J_ST}	-40	150	°C

Parameters	*Symbol*	*Value*	*Unit*
Electronic Discharge (ESD)	Human-body model (HBM), per AEC-Q100-002 Rev D	±2000	V
	Charged-device model (CDM), per AEC-Q100-011 Rev D	±1000	V

1) Only for NSD1624 SOP14 Package

3. Recommended Operating Conditions

Parameters	*Symbol*	*Min*	*Max*	*Unit*	*Comments*
Input Supply Voltage Range	V_{VDD}	10	20	V	
High Side Floating Voltage	V_{BST} - V_{SW}	10	20	V	
High Side SW Pin Voltage	V_{SW}	-1200	1200	V	for SOP14 package
	V_{SW}	-700	700	V	for SOP8 & LGA package
High Side Output Voltage	V_{HO}	V_{SW}	V_{BST}	V	
Low Side Output Voltage	V_{LO}	0	V_{VDD}	V	
Input Signal Voltage Range	V_{HI}, V_{LI}	V_{SGND}	V_{SGND}+17	V	
Signal ground	V_{SGND}	-3	3	V	
Junction Temperature	T_J	-40	140	°C	
Ambient Temperature	T_a	-40	125	°C	

4. Thermal Information

Parameters	*Symbol*	*LGA10*	*SOP8*	*SOP14*	*Unit*
Junction-to-ambient thermal resistance[1)]	θ_{JA}	106	103	85	°C/W
Junction-to-case(top) thermal resistance[1)]	$\theta_{JC\ (top)}$	81	63	41	°C/W
Junction-to-board characterization parameter	Ψ_{JB}	95	70	47	°C/W

1) Standard JESD51-7 High Effective Thermal Conductivity Test Board (2s2p) in an environment described in JESD51-2a.

2) Obtained by Simulating in an environment described in JESD51-2a.

Copyright © 2023, NOVOSENSE

5. Specifications

5.1. Electrical Characteristics

At $V_{VDD} = V_{BST} = 15V$, $V_{SGND} = V_{SW} = 0V$, all voltages are with respect to GND, no load on LO and HO, –40°C < T_J < 125°C

Parameter	*Symbol*	*Min*	*Typ*	*Max*	*Unit*	*Comments*
Supply Section						
VDD quiescent current	I_{VDD_Q}		0.4	0.5	mA	$V_{LI} = V_{HI} = 0V$
High-side supply quiescent current	I_{BST_Q}		0.6	0.76	mA	$V_{LI} = V_{HI} = 0V$
VDD operating current	I_{VDD_O}		1.1		mA	f = 500 kHz, C_{LOAD} = 0nF
High-side supply operating current	I_{BST_O}		1.3		mA	f = 500 kHz, C_{LOAD} = 0nF
SW to GND leakage current	I_{SW_LK}		/	0.01	uA	V_{SW} = 700V
INPUT SECTION						
Input rising threshold	V_{HI_H}, V_{LI_H}	1.8	2.1	2.4	V	
Input falling threshold	V_{HI_L}, V_{LI_L}	0.9	1.2	1.5	V	
Input voltage Hysteresis	V_{HI_HYS}, V_{LI_HYS}		0.9		V	
High Level Logic Input Bias Current	I_{IN+}		17		uA	V_{LI} / V_{HI} = 5V
Low Level Logic Input Bias Current	I_{IN-}		0	10	uA	$V_{LI} = V_{HI} = 0.3V$
Input pulldown resistance	R_{IN}		260		kOhm	$V_{LI} = V_{HI} = 3V$
UNDER VOLTAGE LOCKOUT						
turn-on threshold voltage of VDD	V_{DD_UV+}	8.6	9.1	9.5	V	
turn-off threshold voltage of VDD	V_{DD_UV-}	8.2	8.7	9.1	V	
V CC hysteresis	V_{DD_UVH}		0.4		V	
UVLO positive Threshold on V_{BST}-V_{SW}	V_{BST_UV+}	7.9	8.4	8.9	V	
UVLO negative Threshold on V_{BST}-V_{SW}	V_{BST_UV-}	7.4	7.9	8.3	V	
VBST hysteresis	V_{BST_UVH}		0.5		V	
Output SECTION						
Low level output voltage	V_{OL}		0.06		V	I_{LO} =100 mA
High level output voltage	V_{OH}		0.12		V	I_{LO} =-100 mA, V_{LOH} = V_{VDD}-V_{LO}
Low level output Resistance	R_{OL}		0.6	1.2	Ohm	
High level output Resistance	R_{OH}		1.2	2	Ohm	
Peak source current	I_{OSRC}		4		A	VO=0 V
Peak sink current	I_{OSNK}		6		A	VO=VDD

Copyright © 2023, NOVOSENSE

5.2. Switching Characteristics

At V_{VDD} = V_{BST} = 15V, V_{SGND} = V_{SW} = 0V, all voltages are with respect to GND, no load on LO and HO if not mentioned, –40°C < T_J < 125°C

Parameter	Symbol	Min	Typ	Max	Unit	Comments
High Side Startup Time	$T_{startup}$		10	15	us	between VB>UVLO and First HO Pulse
Rise Time LO, HO	T_R		10		ns	C_{load} = 1000pF
Fall Time LO, HO	T_F		9		ns	C_{load} = 1000pF
Low-to-high delay matching	T_{LHDM}			7	ns	Pulse width = 1us
High-to-low delay matching	T_{HLDM}			7	ns	Pulse width = 1us
Minimum Input Filter	T_{MPW}		11	30	ns	
Turn-on delay, LI to LO	T_{LDLH}		22	35	ns	
Turn-off delay, LI to LO	T_{LDHL}		22	35	ns	
Turn-on delay, HI to HO	T_{HDLH}		22	35	ns	
Turn-off delay, HI to HO	T_{HDHL}		22	35	ns	
Dead time	T_{dt}		2		ns	

5.3. Typical Performance Characteristics

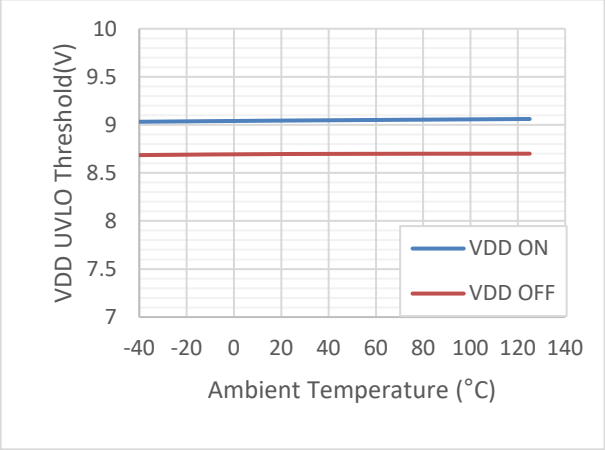

Figure 5.1 VDD UVLO Threshold vs Temperature

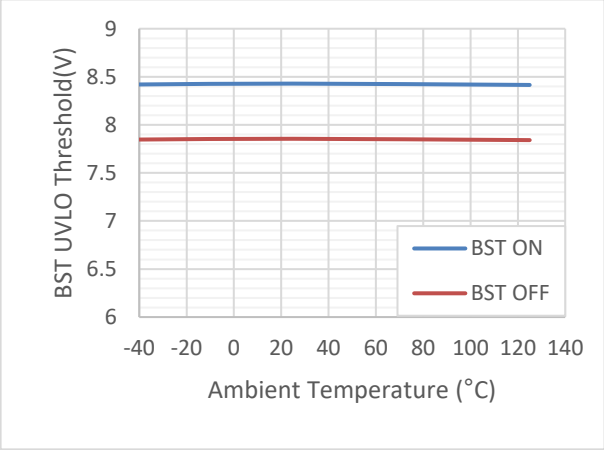

Figure 5.2 BST UVLO Threshold vs Temperature

Copyright © 2023, NOVOSENSE

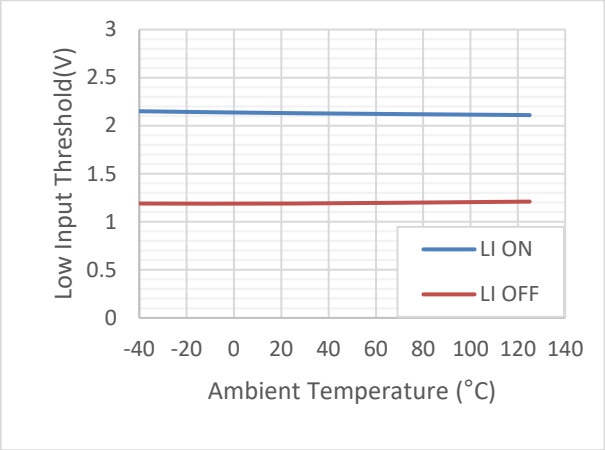

Figure 5.3 Low Input Logic Threshold vs Temperature

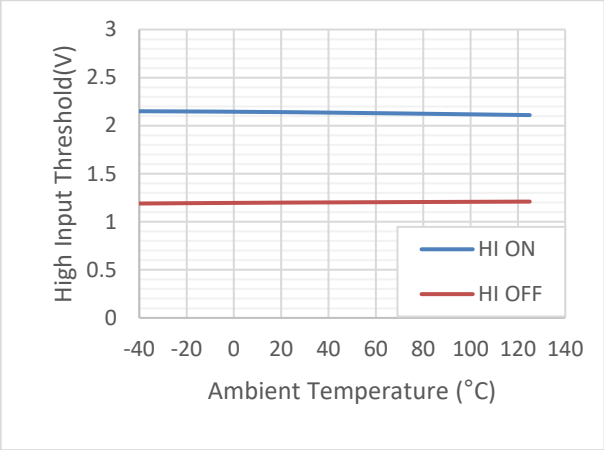

Figure 5.4 High Input Logic Threshold vs Temperature

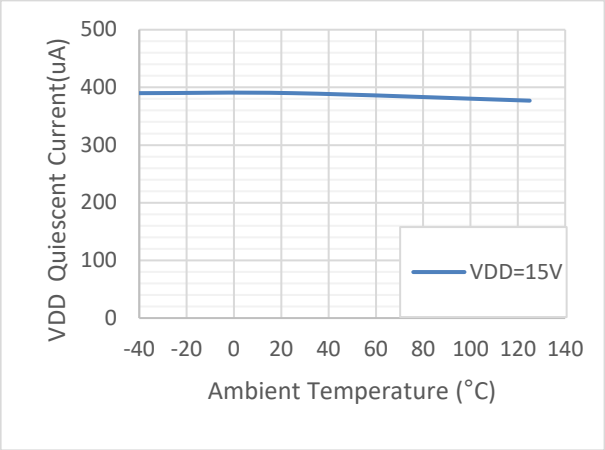

Figure 5.5 VDD Quiescent Current vs Temperature

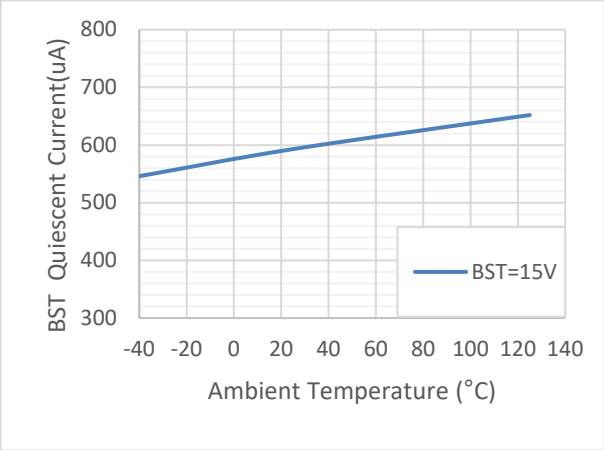

Figure 5.6 BST Quiescent Current vs Temperature

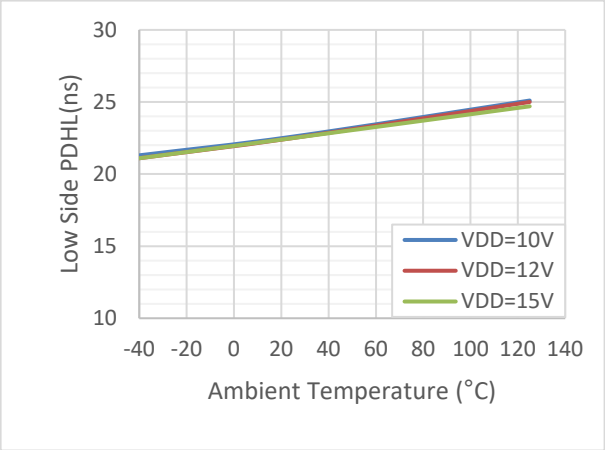

Figure 5.7 Low Side Turn-off Delay vs Temperature

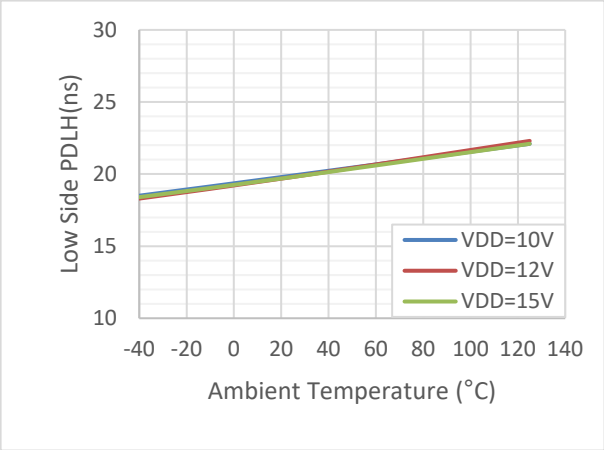

Figure 5.8 Low Side Turn-on Delay vs Temperature

Copyright © 2023, NOVOSENSE

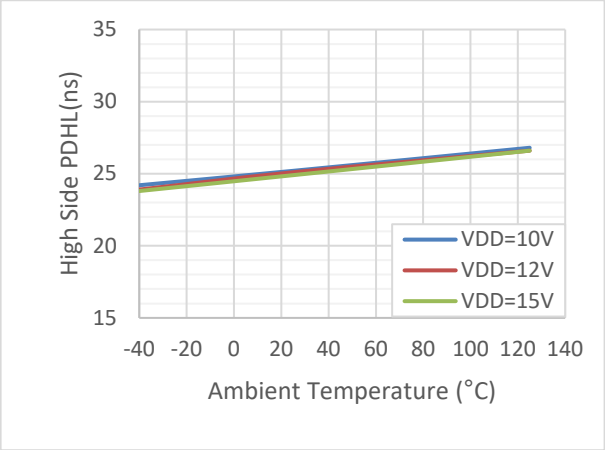

Figure 5.9 High Side Turn-off Delay vs Temperature

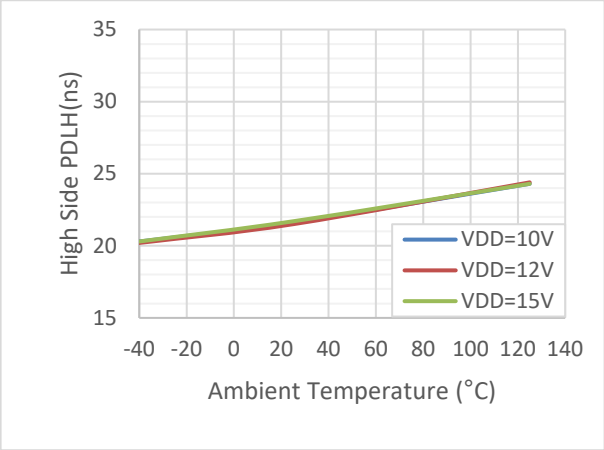

Figure 5.10 High Side Turn-on Delay vs Temperature

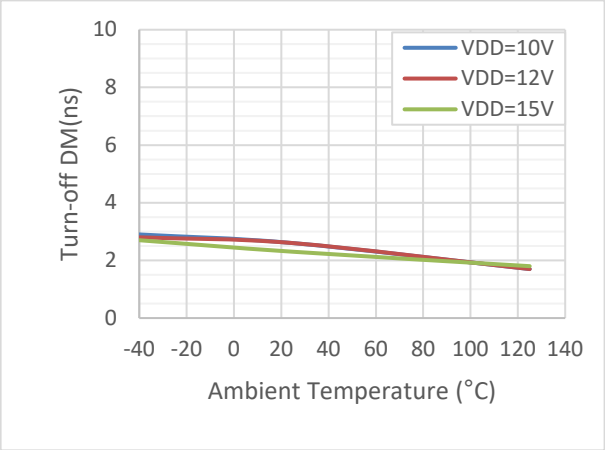

Figure 5.11 Turn-off Delay Match vs Temperature

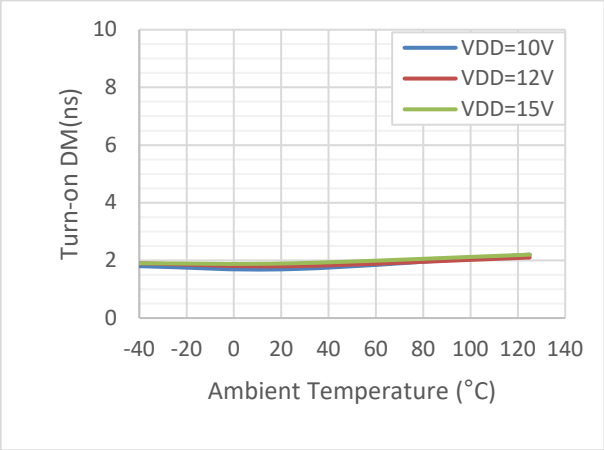

Figure 5.12 Turn-on Delay Match vs Temperature

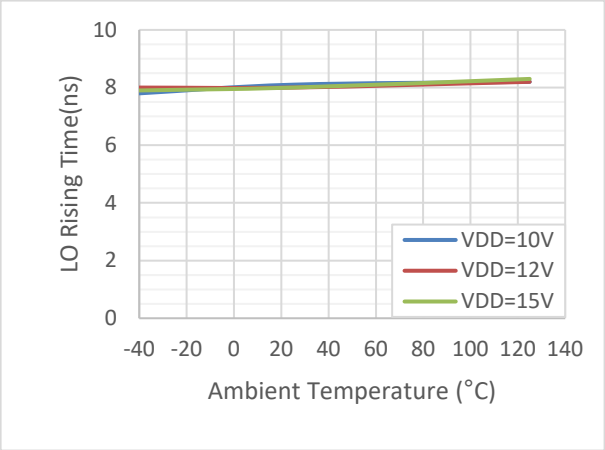

Figure 5.13 LO Rising Time (Co=1000pF) vs Temperature

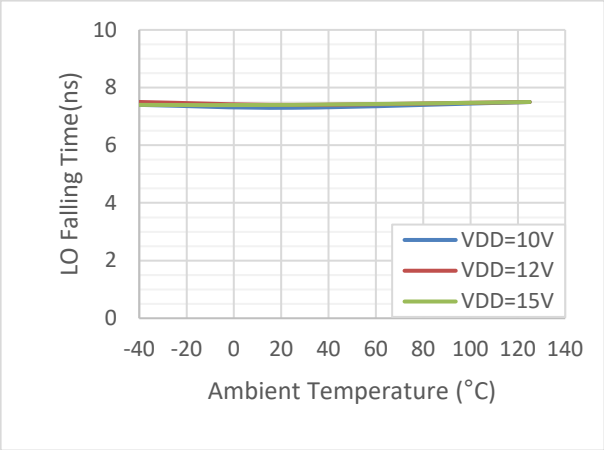

Figure 5.14 LO Falling time (Co=1000pF) vs Temperature

Copyright © 2023, NOVOSENSE

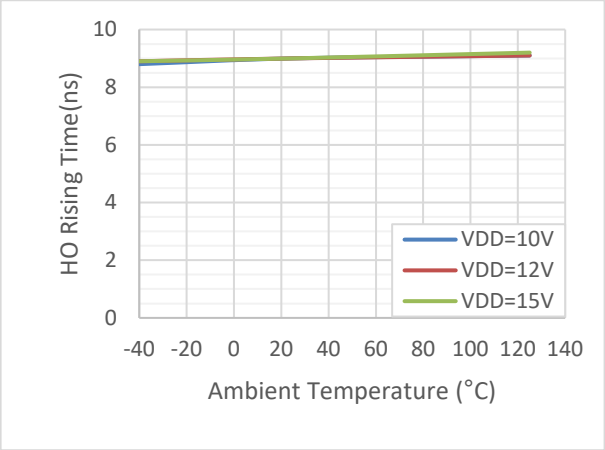

Figure 5.15 HO Rising Time (Co=1000pF) vs Temperature

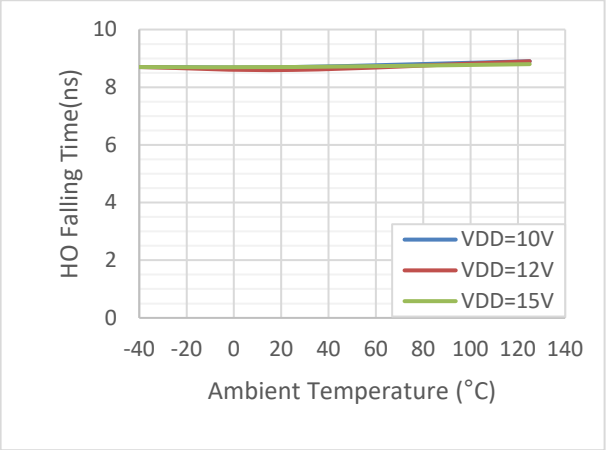

Figure 5.16 HO Falling Time (Co=1000pF) vs Temperature

5.4. Parameter Measurement Information

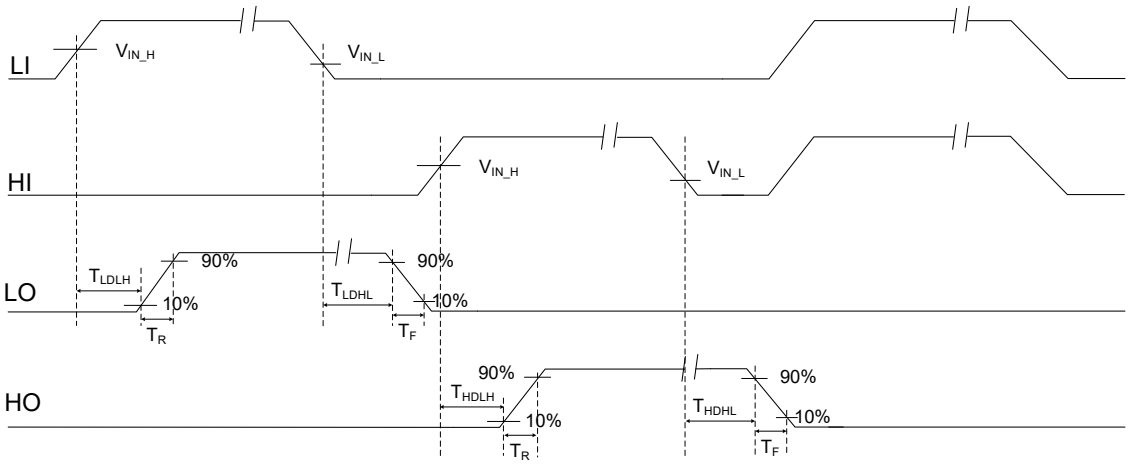

Figure 5.17 Propagation Delay, rise and fall time

6. General Description

6.1. Overview

NSD1624x is a high reliability low side-high side gate driver with two independent input pins HIN and LIN dedicated to be used in AC-DC and DC-AC power applications. Driver inputs are compatible with CMOS and TTL logic hence it provides easy interface with analog and digital controllers. The high side is a floating section that usually require an effective bootstrap circuit to bias. High side Isolated driver has high negative and dv/dt immunity on SW pin that improve the robustness of the driver. NSD1624x has independent under voltage lock out feature for both high and low side gate drivers which ensure the working of both channels at V_{DD_UV+} and V_{BST_UV+}.

In popular power converter topologies such as half bridge, full bridge converter, LLC, two switch forward converter and phase-shift full bridge, low and high side gate driver provides a function of buffer and level shifter. This driver can drive the top side MOSFET

Copyright © 2023, NOVOSENSE

and IGBT whose source and emitter node is a dynamically changing. Therefore, to make them stable referenced to a fixed potential, floating-driver devices are necessary to use in these topologies.

NSD1624x offers best in class propagation delay, less than 7ns delay matching, low quiescent and operating current at high frequencies. Input pins (HI and LI) allow full and independent flexible ON-OFF state of the output.

6.2. Functional Block Diagram

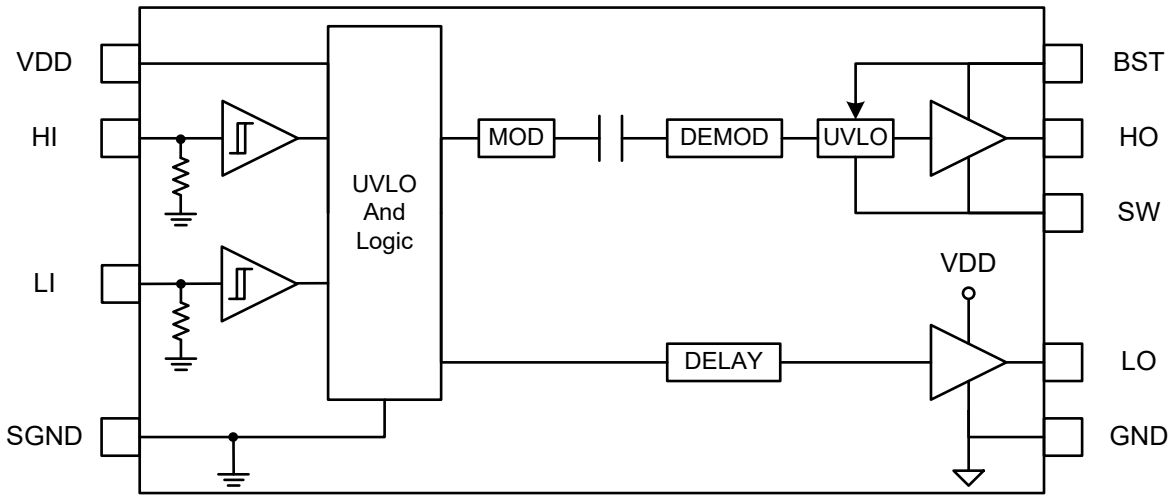

Figure 6.1 Functional Block Diagram

6.3. Feature Description

6.3.1 Under Voltage Lock Out (UVLO)

NSD1624x has independent under voltage lock out feature for both high and low side gate drivers which ensure the working of both channels at VDD_UV+ and VBST_UV+. If the VDD is below the VDD_UV+, the output of both high and low side channel will remain low. Similarly, if the VBST is below the VBST_UV+, the output of high side channel will remain low. So the high side bias voltage has no influence on the low side output channel, regardless of the state of the input signal.

The VDD and VBST ULVO protection circuits have hysteresis (VVDD_HYS) to prevent ground noise in power supply. Hysteresis also allows small drops in supply power which are usually happen in startup.

6.3.2 Input Stage

NSD1624x is a low side-high side gate driver with two independent input pins HIN and LIN. Both the inputs are compatible with CMOS and TTL logic which ensures that the inputs can be driven with analog and digital controllers.

The typical value of high input threshold (VIN_H) is 2.1V whereas the low threshold (VIN_L) 1.2V. The typical value of hysteresis on input pins is 0.9V which offers higher noise immunity compared to traditional TTL logic implementations. NSD1624x also feature tight control of the input pin threshold voltage levels which ease system design consideration and ensure stable operation across temperature.

Both the input pins are internally pulled down through a resistor of 260kΩ which indicates its logic state in case of floating pin. This feature can be regarded as important because the outputs stay low in case of any input is floating. It is recommended to ground the unused input pin especially in the practical applications.

The device has dead-time control function which means the outputs will be low as soon as both inputs are high. The dead-time is about 10ns and unadaptable.

The input logic is explained in the following table.

Copyright © 2023, NOVOSENSE

6.3.3 Input Table

INPUTS		OUTPUTS	
LI	**HI**	**LO**	**HO**
L	H	L	H
H	L	H	L
H	H	L	L
L	L	L	L

6.3.4 Output Stage

NSD1624x is equipped with two independent drivers. The device has ability to provide 4A source and sink current which can effectively charge and discharge a load capacitor of 1nF in 10ns.

7. Application Note

7.1. Typical Application Circuit

The circuit shows a typical half-bridge configuration by using the driver NSD1624x which could be used in several popular power converter topologies such as half-bridge/full bridge/LLC isolated topologies applications.

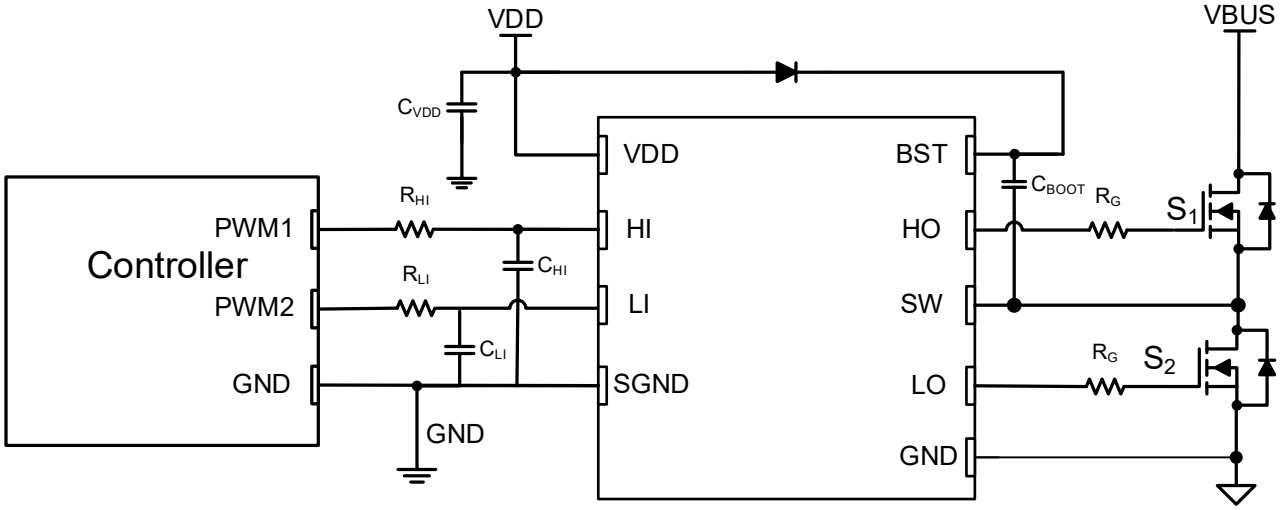

Figure 7.1 Simplified Half-Bridge Schematic

7.2. ESD Structure

Figure.7.2 illustrates the multiple parasitic diodes involved in the ESD protection components of NSD1624x device.

For the SOP8 and LGA package, SGND and GND have been connected internally.

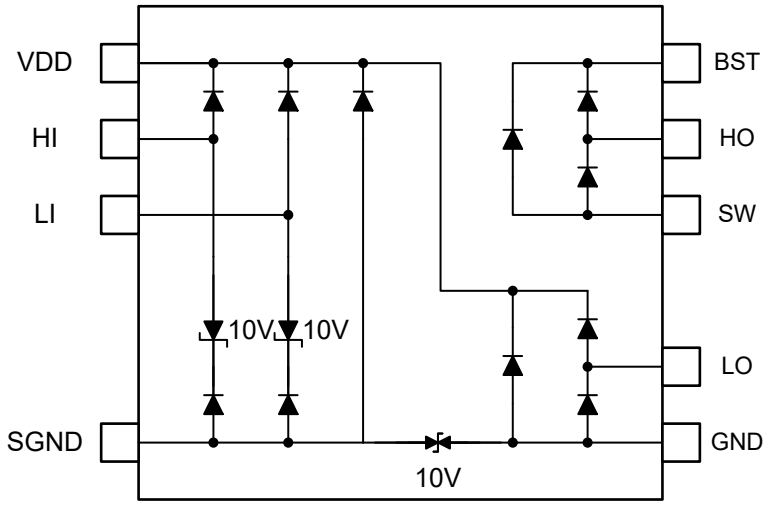

Figure 7.2 ESD Structure for SOP14

7.3. Layout Recommendations

PCB layout is important to get optimal performance. Some of the layout guidelines to be followed are listed below:

- High frequency switching current that charges and discharges the gate of external power transistor, that causes EMI and ringing issues. To minimize the parasitic inductance and ringing on the gate terminal of the low side MOSFET S2, keep the low side loop 'LO-S2-GND' as small as possible. Similarly, keep the path of high side driver 'HO-S1-SW' as minimum as possible.
- Place a bypass capacitor C_{VDD} as close to VDD pin as possible and minimized the path of 'VDD-C_{VDD}-GND'. Similarly, follow the same rule for 'VBST-C_{BOOT}-SW' loop.
- Place a RC input filter with R=2 to 5Ω, & C=100pF close to the driver input pins (HI, LI)
- Use of SMD type devices with low-ESR and low-ESL capacitor are highly recommended.
- Large amount of copper should be placed at VDD, BST, GND, and SW pins for thermal dissipation.

Copyright © 2023, NOVOSENSE

8. Package information

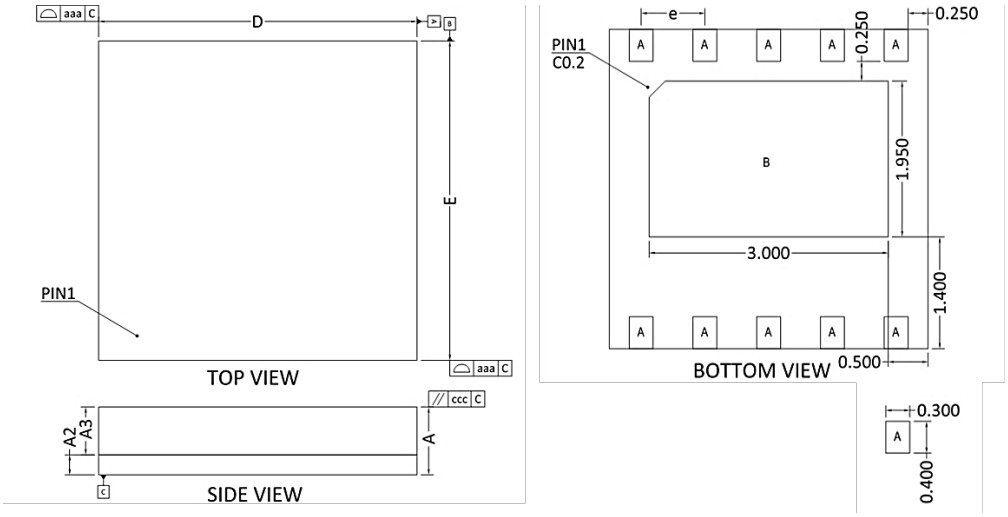

MILLIMETER			
SYMBOL	MIN	NOR	MAX
A	0.77	0.85	0.93
A2	0.22	0.25	0.28
A3	0.55	0.60	0.65
D	3.90	4.00	4.10
E	3.90	4.00	4.10
e	0.8 BSC		
aaa	0.10		
ccc	0.05		

Figure 8.1 LGA10 4X4 Package Shape and Dimension

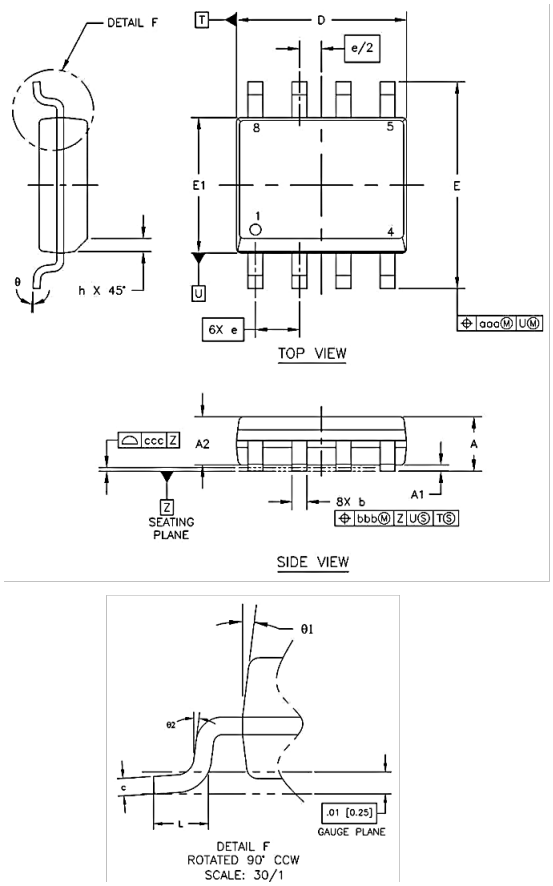

DESCRIPTION	SYMBOL	MILLIMETER		
		MIN	NOM	MAX
TOTAL THICKNESS	A	1.35		1.75
STAND OFF	A1	0.10		0.25
MOLD THICKNESS	A2	1.25		---
LEAD WIDTH	b	0.35		0.49
L/F THICKNESS	c	0.19		0.25
BODY SIZE	D	4.80		5.00
	E1	3.80		4.00
	E	5.80		6.20
LEAD PITCH	e	1.27 BSC		
	L	0.40		1.25
	h	0.25		0.50
	θ	0°		7°
	θ1	5°		15°
	θ2	2°	7°	12°
LEAD EDGE OFFSET	aaa	0.25		
LEAD OFFSET	bbb	0.25		
COPLANARITY	ccc	0.10		

Figure 8.2 SOP8 Package Shape and Dimension

Copyright © 2023, NOVOSENSE

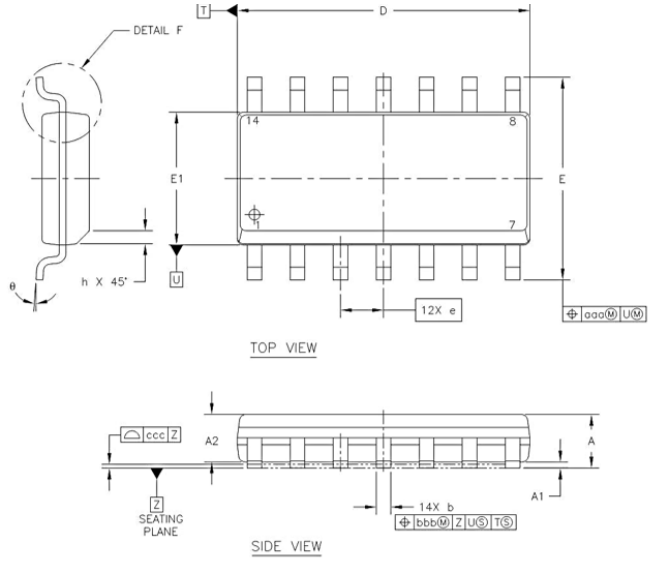

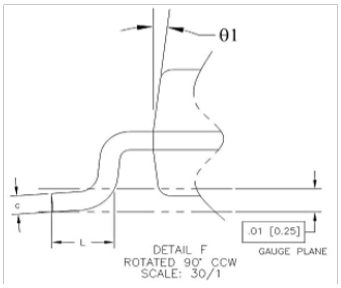

DESCRIPTION	SYMBOL	MILLIMETER		
		MIN	NOM	MAX
TOTAL THICKNESS	A	1.35	---	1.75
STAND OFF	A1	0.10	---	0.25
MOLD THICKNESS	A2	1.25	---	---
LEAD WIDTH	b	0.33	---	0.51
L/F THICKNESS	c	0.19	---	0.25
BODY SIZE	D	8.55	---	8.75
	E1	3.80	---	4.00
	E	5.80	---	6.20
LEAD PITCH	e	1.27 BSC		
	L	0.40	---	1.27
	h	0.25	---	0.50
	θ	0°	---	8°
	θ1	5°	---	15°
LEAD EDGE TOLERANCE	aaa	0.25		
LEAD OFFSET	bbb	0.25		
COPLANARITY	ccc	0.10		

Figure 8.3 SOP14 Package Shape and Dimension

9. Ordering Information

Part No.	Temperature	Automotive	Package Drawing	MSL	SPQ
NSD1624-DLAJR	-40 to 125°C	NO	LGA10	3	2500
NSD1624-DSPR	-40 to 125°C	NO	SOP8	3	2500
NSD1624-DSPKR	-40 to 125°C	NO	SOP14	3	2500
NSD16241-DSPKR	-40 to 125°C	NO	SOP14	3	2500
NSD16241-DSPR	-40 to 125°C	NO	SOP8	3	2500
NSD16242-DSPR	-40 to 125°C	NO	SOP8	3	2500

10. Tape and Reel Information

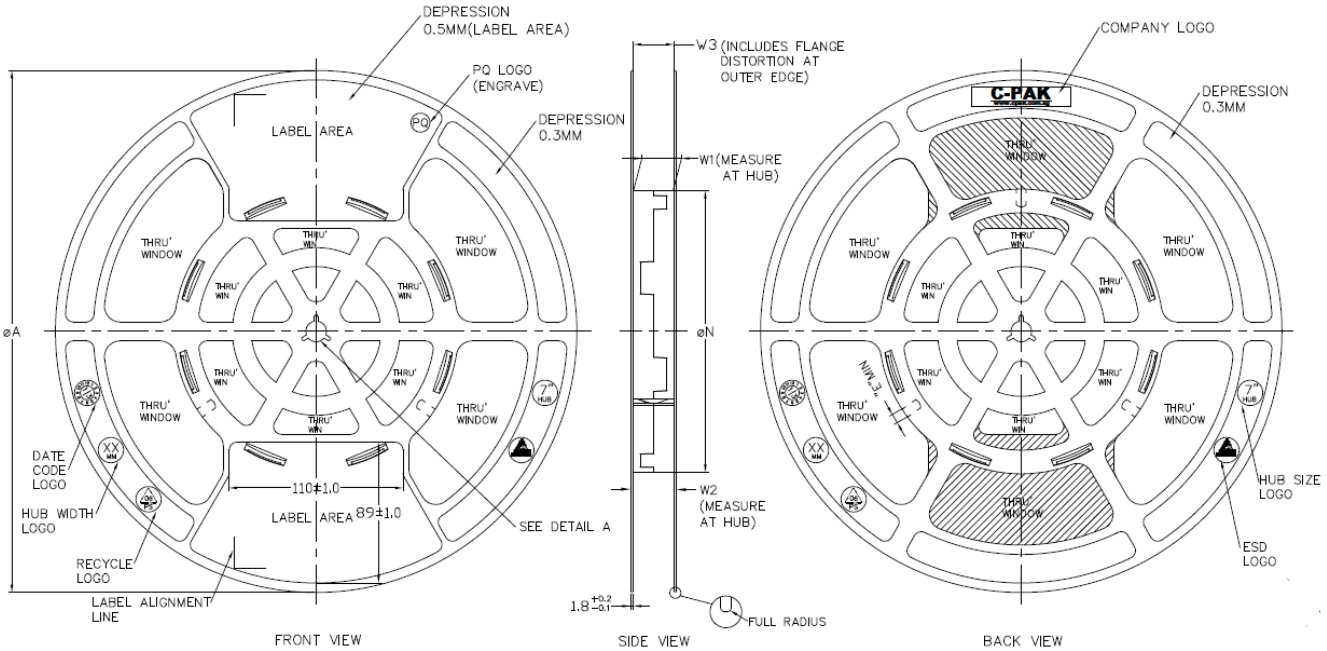

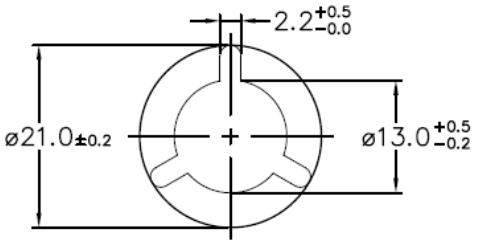

ARBOR HOLE
DETAIL A
SCALE : 3:1

PRODUCT SPECIFICATION						
TAPE WIDTH	ØA ±2.0	ØN ±2.0	W1	W2 (MAX)	W3	E (MIN)
08MM	330	178	8.4 +1.5 −0.0	14.4	SHALL ACCOMMODATE TAPE WIDTH WITHOUT INTERFERENCE	5.5
12MM	330	178	12.4 +2.0 −0.0	18.4		5.5
16MM	330	178	16.4 +2.0 −0.0	22.4		5.5
24MM	330	178	24.4 +2.0 −0.0	30.4		5.5
32MM	330	178	32.4 +2.0 −0.0	38.4		5.5

SURFACE RESISTIVITY			
LEGEND	SR RANGE	TYPE	COLOUR
A	BELOW 10^{12}	ANTISTATIC	ALL TYPES
B	10^{6} TO 10^{11}	STATIC DISSIPATIVE	BLACK ONLY
C	10^{5} & BELOW 10^{5}	CONDUCTIVE (GENERIC)	BLACK ONLY
E	10^{9} TO 10^{11}	ANTISTATIC (COATED)	ALL TYPES

Figure 10.1 Tape Information

Copyright © 2023, NOVOSENSE

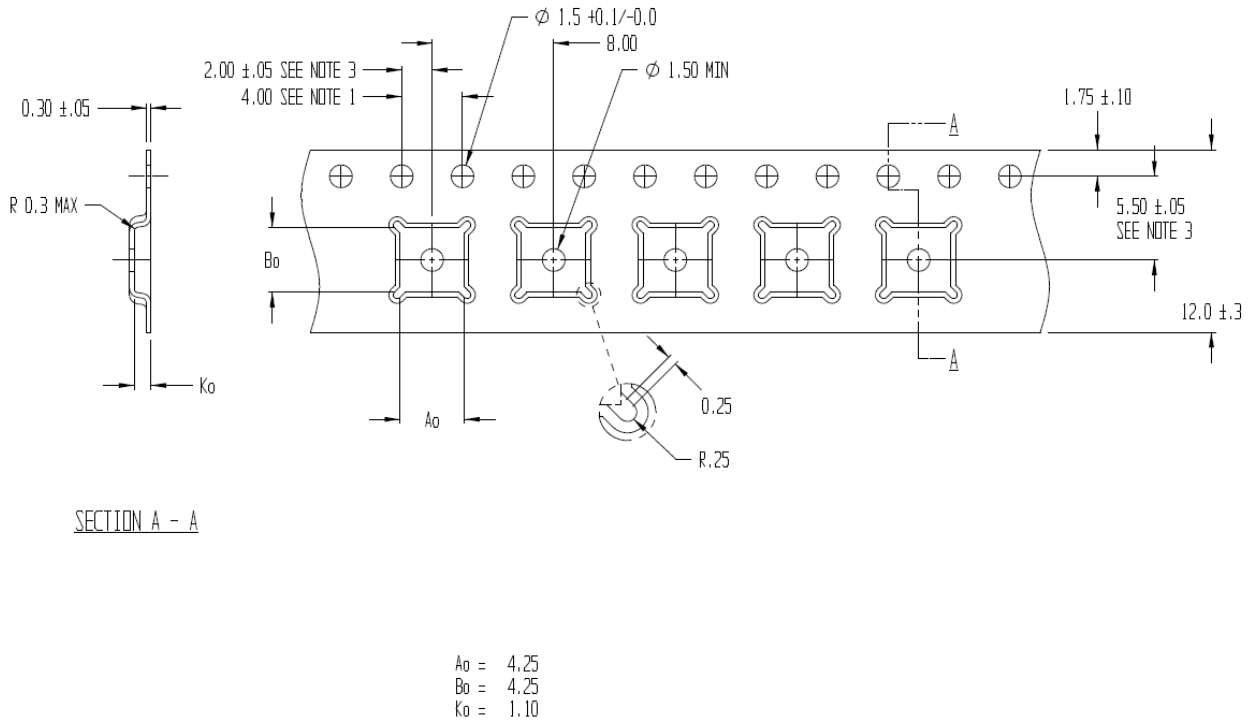

Figure 10.2 Reel information of LGA10

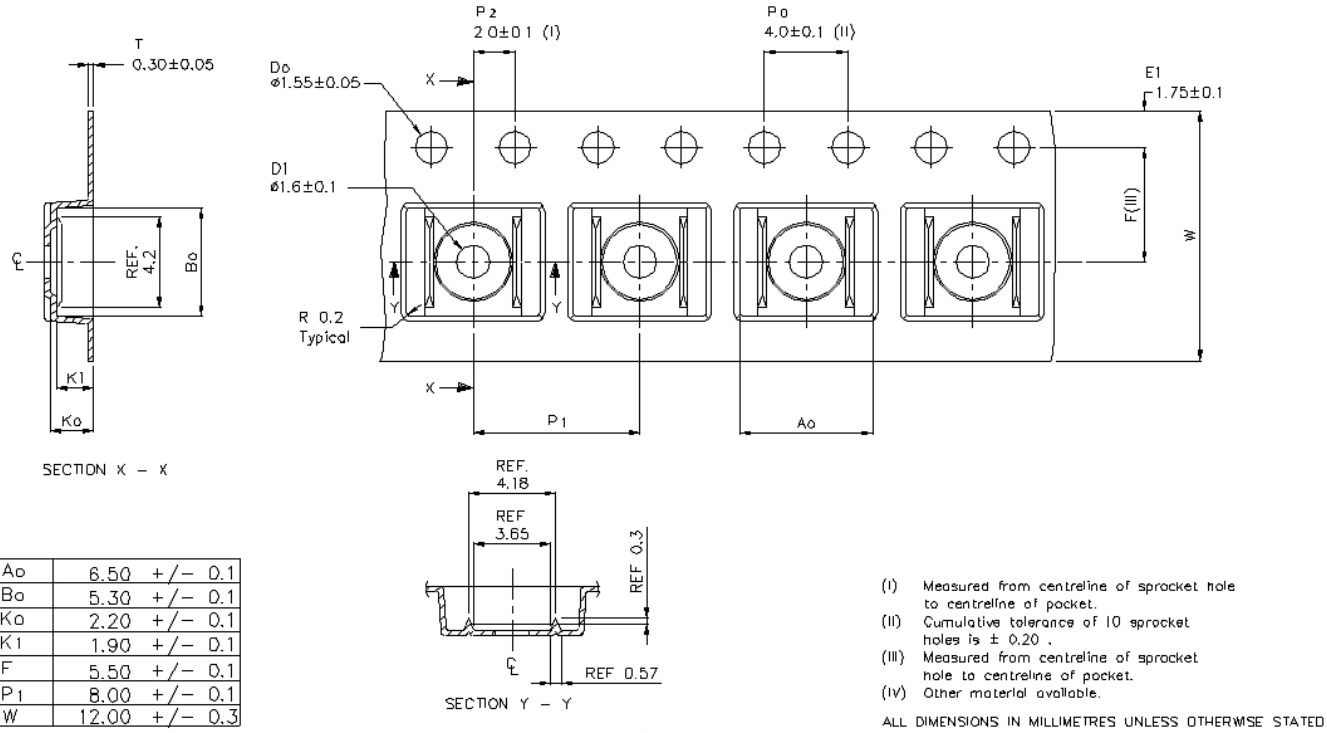

Ao	6.50	+/- 0.1
Bo	5.30	+/- 0.1
Ko	2.20	+/- 0.1
K1	1.90	+/- 0.1
F	5.50	+/- 0.1
P1	8.00	+/- 0.1
W	12.00	+/- 0.3

Figure 10.3 Reel information of SOP8

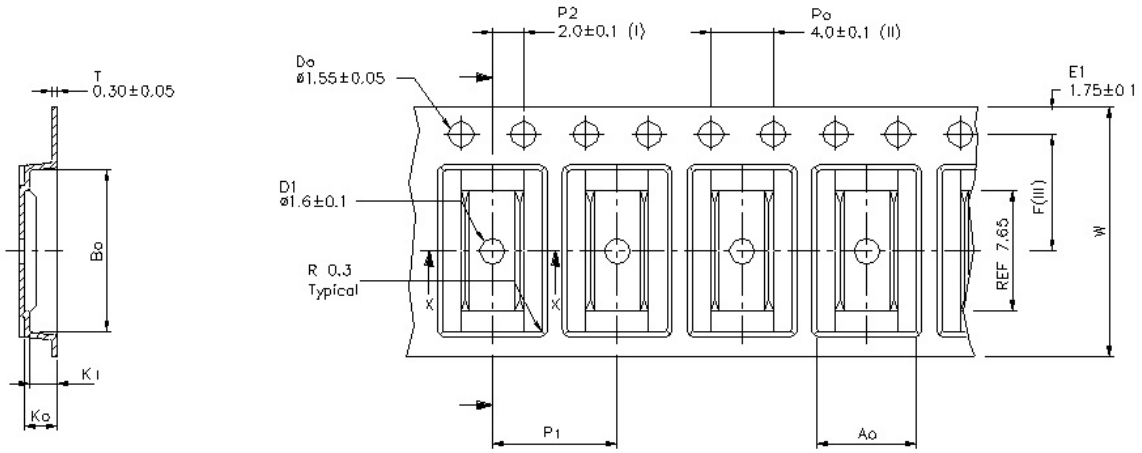

Ao	6.55 +/−0.1
Bo	10.38 +/−0.1
Ko	2.10 +/−0.1
K1	1.80 +/−0.1
F	7.50 +/−0.1
P1	8.00 +/−0.1
W	16.00 +/−0.3

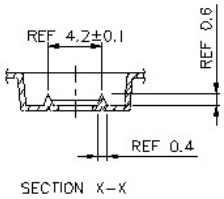

(I) Measured from centreline of sprocket hole to centreline of pocket.
(II) Cumulative tolerance of 10 sprocket holes is ± 0.20 .
(III) Measured from centreline of sprocket hole to centreline of pocket.
(IV) Other material available.

ALL DIMENSIONS IN MILLIMETRES UNLESS OTHERWISE STATED.

Figure 10.4 Reel information of SOP14

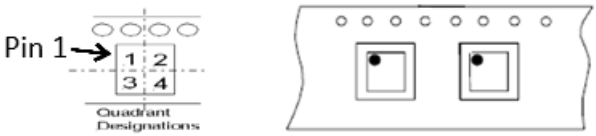

Figure 10.5 Quadrant Designation for Pin1 Orientation in Tape

11. Revision History

Revision	Description	Date
1.0	Initial version	2022/6/19
1.1	1. Add the notes for Pin Configuration and Description. 2.update the maximum of I_{BST_Q} from 0.7mA to 0.76mA. 3. Add the part number information of NSD16241 and NSD16242. 4. The SPQ of NSD1624-DLAJR changed from 3000 to 2500 in ordering information.	2023/8/10

Copyright © 2023, NOVOSENSE

IMPORTANT NOTICE

The information given in this document shall in no event be regarded as any warranty or authorization of, express or implied, including but not limited to accuracy, completeness, merchantability, fitness for a particular purpose or infringement of any third party's intellectual property rights.

You are solely responsible for your use of Novosense' products and applications, and for the safety thereof. You shall comply with all laws, regulations and requirements related to Novosense's products and applications, although information or support related to any application may still be provided by Novosense.

The resources are intended only for skilled developers designing with Novosense' products. Novosense reserves the rights to make corrections, modifications, enhancements, improvements or other changes to the products and services provided. Novosense authorizes you to use these resources exclusively for the development of relevant applications designed to integrate Novosense's products. Using these resources for any other purpose, or any unauthorized reproduction or display of these resources is strictly prohibited. Novosense shall not be liable for any claims, damages, costs, losses or liabilities arising out of the use of these resources.

For further information on applications, products, and technologies, please contact Novosense (www.novosns.com).

Suzhou Novosense Microelectronics Co., Ltd

Copyright © 2023, NOVOSENSE