# CTMLA93BR1

# 5mm Assembly LED

## Features

- 5mm Assembly Red LED
- Viewing Angle = 80°
- Compatible with infrared and vapor phase reflow solder process
- High reliability
- Ultra bright Red
- RoHS compliance

## Applications

- Optical indicator.
- Switch and Symbol Display

.

## Description

The CTMLA93BR1 is an AlGaInP Red LED housed in a miniature LAMP package. The device has a dominant wavelength of 624nm LED.

## Package Outline

Cathode

Anode

## Schematic

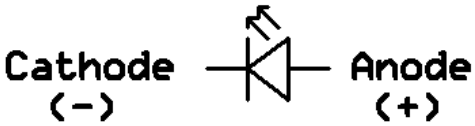

## Absolute Maximum Rating at 25$^0$C

| Symbol | Parameters | Ratings | Units | Notes |
|---|---|---|---|---|
| $I_F$ | Continuous Forward Current | 25 | mA | |
| $I_{FP}$ | Peak Forward Current | 60 | mA | 1 |
| $V_R$ | Reverse Voltage | 5 | V | |
| $T_{opr}$ | Operating Temperature | -40 ~ +85 | $^0$C | |
| $T_{stg}$ | Storage Temperature | -40 ~ +100 | $^0$C | |
| $T_{sol}$ | Soldering Temperature | 260 | $^0$C | 2 |
| $P_D$ | Power Dissipation at(or below) 25℃Free Air Temperature | 60 | mW | |

## Electro-Optical Characteristics *TA = 25°C (unless otherwise specified)*

### Optical Characteristics

| Symbol | Parameters | Test Conditions | Min | Typ | Max | Units | Notes |
|---|---|---|---|---|---|---|---|
| Iv | Radiant Intensity | $I_F$=20mA | 40 | 100 | - | mcd | 1 |
| λp | Peak Wavelength | $I_F$=20mA | - | 624 | - | nm | |
| 2θ1/2 | Viewing Angle | $I_F$=20mA | - | 80 | - | deg | |

### Electrical Characteristics

| Symbol | Parameters | Test Conditions | Min | Typ | Max | Units | Notes |
|---|---|---|---|---|---|---|---|
| $V_F$ | Forward Voltage | $I_F$=20mA | 1.7 | 2.0 | 2.4 | V | |
| $I_R$ | Reverse Current | $V_R$=5V | - | - | 10 | μA | |

**Notes:**

1. IP Conditions—Pulse Width ≤100us and Duty≤10%.
2. Soldering time ≤ 5 seconds.

## Typical Characteristic Curves

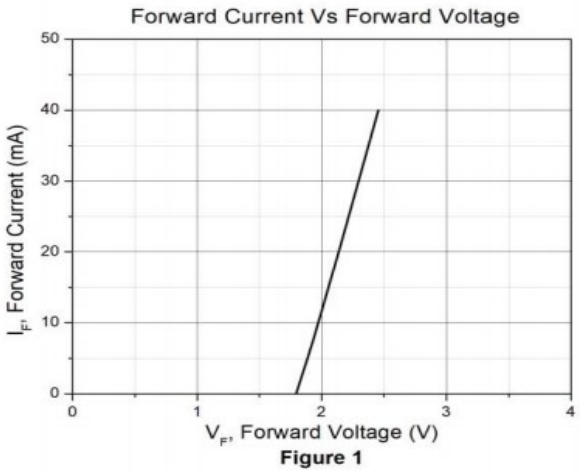


**Figure 1**

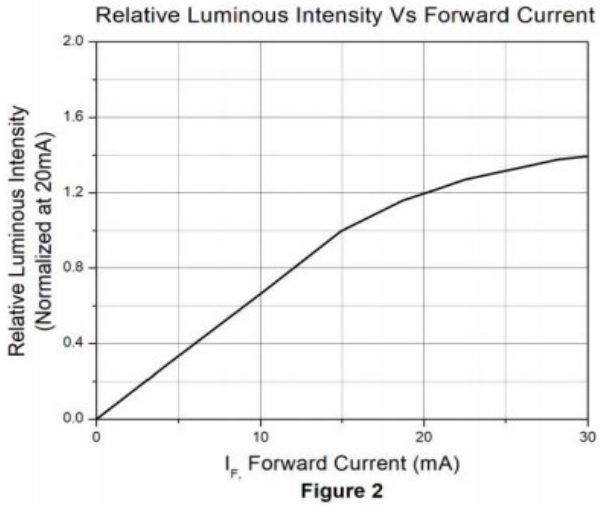


**Figure 2**

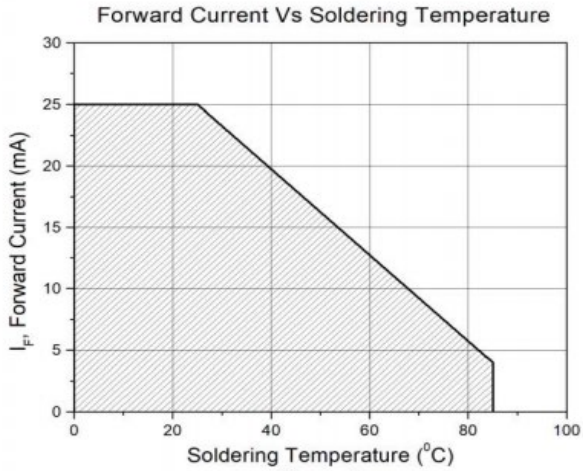


**Figure 3**

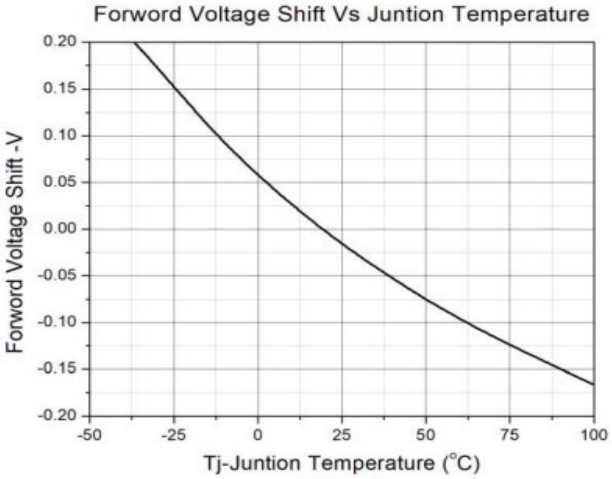


**Figure 4**

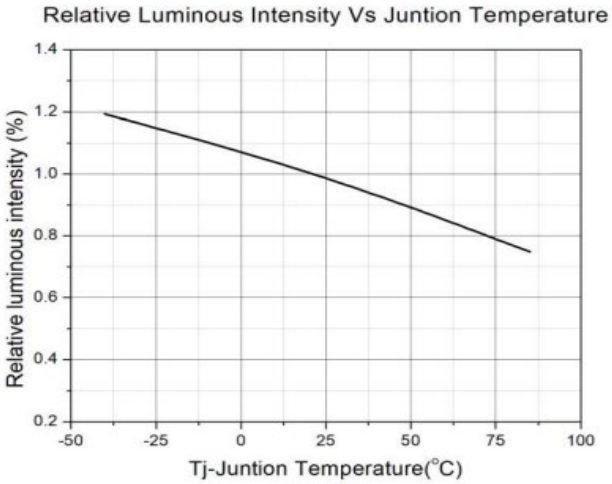


**Figure 5**

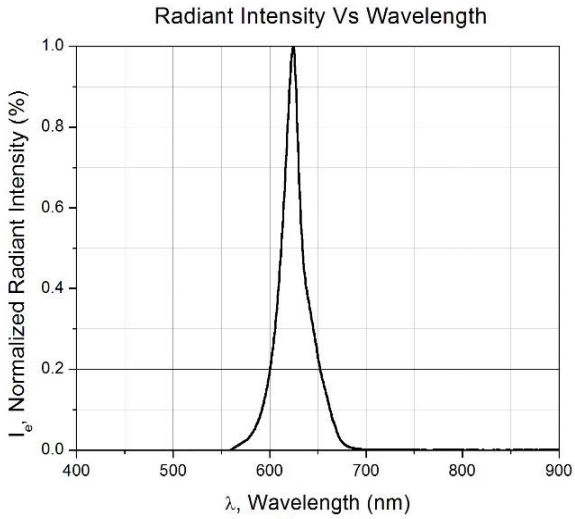


**Figure 6**

## Typical Characteristic Curves

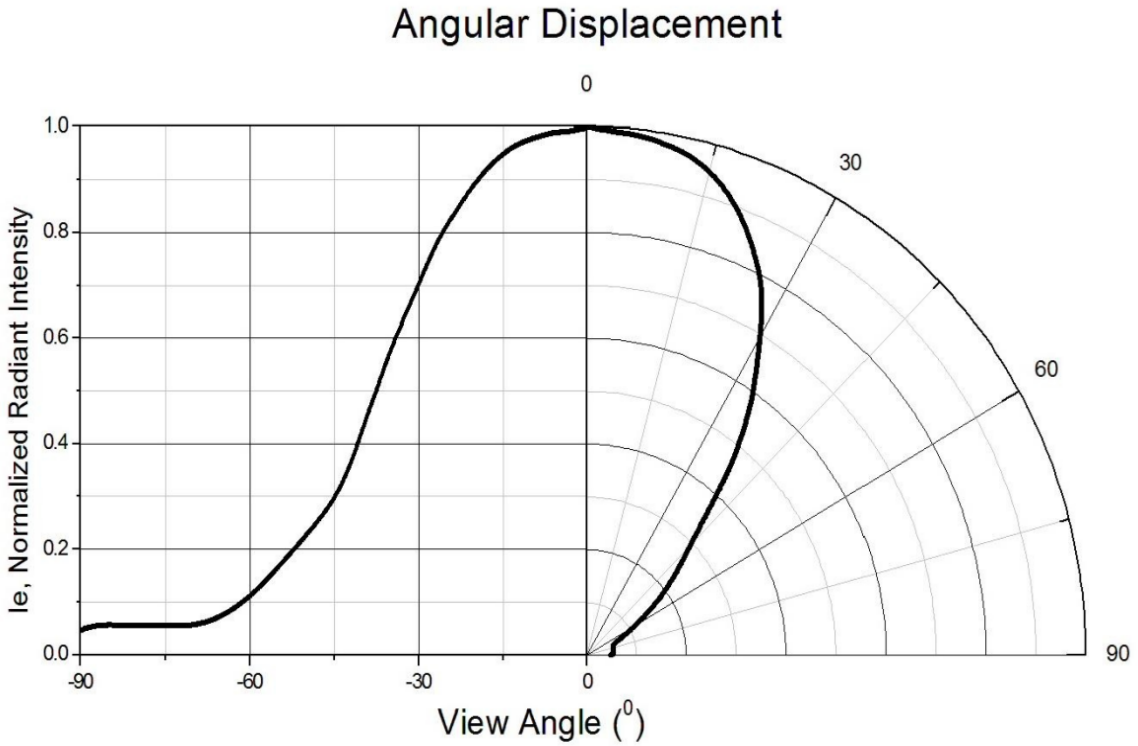


**Figure 7**

## Package Dimension *All dimensions are in mm, unless otherwise stated.*

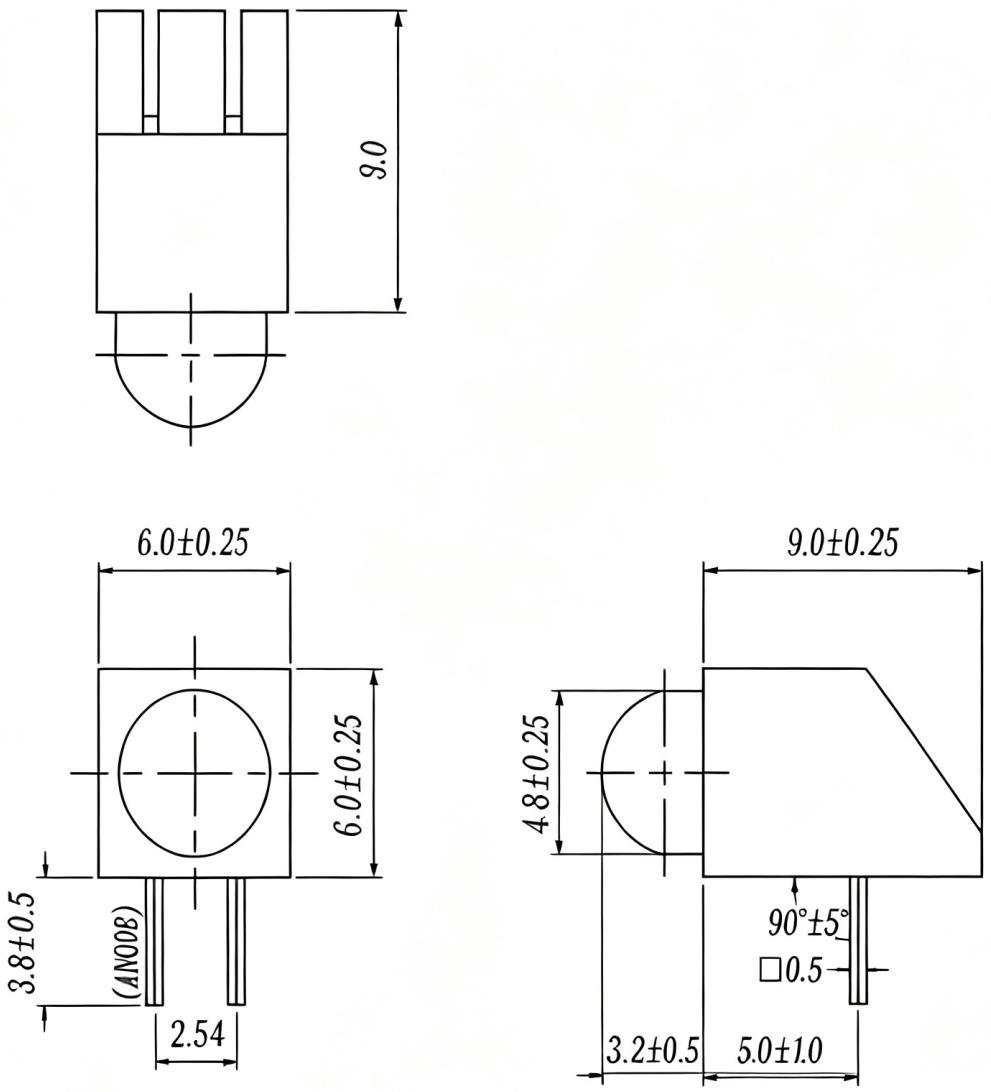


## Ordering Information

# CTMLA93BR1

| *Part Number* | *Description* | *Quantity* |
|---|---|---|
| CTMLA93BR1 | 1 Bag | 500 pcs |

## Packing Specification

Bag

Inner Carton

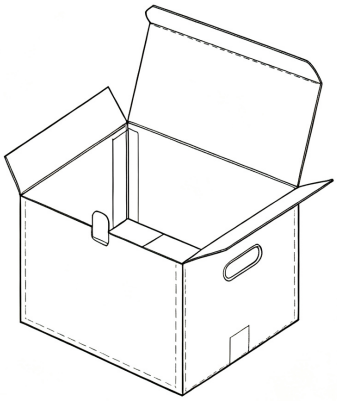

Outside Carton

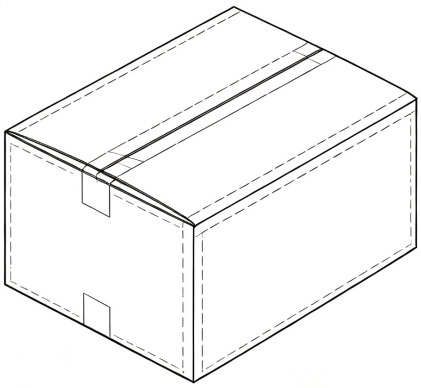

## Dimension

| Dimension | Length (L) | Width (W) | Height (H) |
|---|---|---|---|
| Inner Carton | 22 | 15 | 9 |
| Outside Carton | 49 | 33 | 25 |

Unit: cm

Packing Quantity
500 PCS/1 Bag, 6 Bags/1 Inner Carton, 10 Inner Cartons/1 Outside Carton

## Label Form Specification

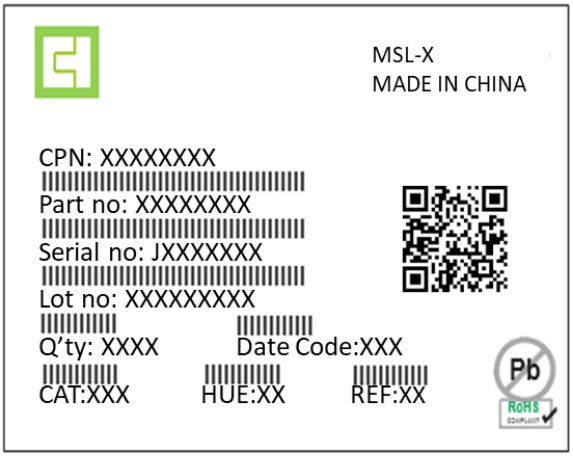


CPN : Customer Part Number

Part no: CTM Production Number

Serial no: Production Number

Lot no: Lot number

Q'ty: Packing Quantity

Date Code: Manufacture Date

CAT : Ranks

HUE: Bin Code of Chromaticity Coordinates

REF : Bin Code of Reference

MADE IN CHINA: Production Place

## Storage Condition

1. Do not open moisture proof bag before the products are ready to use.
2. The moisture barrier bag should be stored at 30°C and 90%R.H. max. before opening. Shelf life of non-opened bag is 12 months after the bag sealing date.
3. After opening the moisture barrier bag floor life is 1 year at 30°C/60%RH. max. Unused LEDs should be resealed into moisture barrier bag. (Refer to J-STD-020 Standard)
4. If the moisture absorbent material has faded away or the LEDs have exceeded the storage time, baking treatment should be performed using the J-STD-033 Standard conditions.

## Wave soldering (follow the JEDEC standard JESD22-A111)

One time soldering is recommended within the condition of temperature.
Temperature: 260+0/-5˚C.
Time: 10 sec.
Preheat temperature:25 to 140˚C.
Preheat time: 30 to 80 sec.

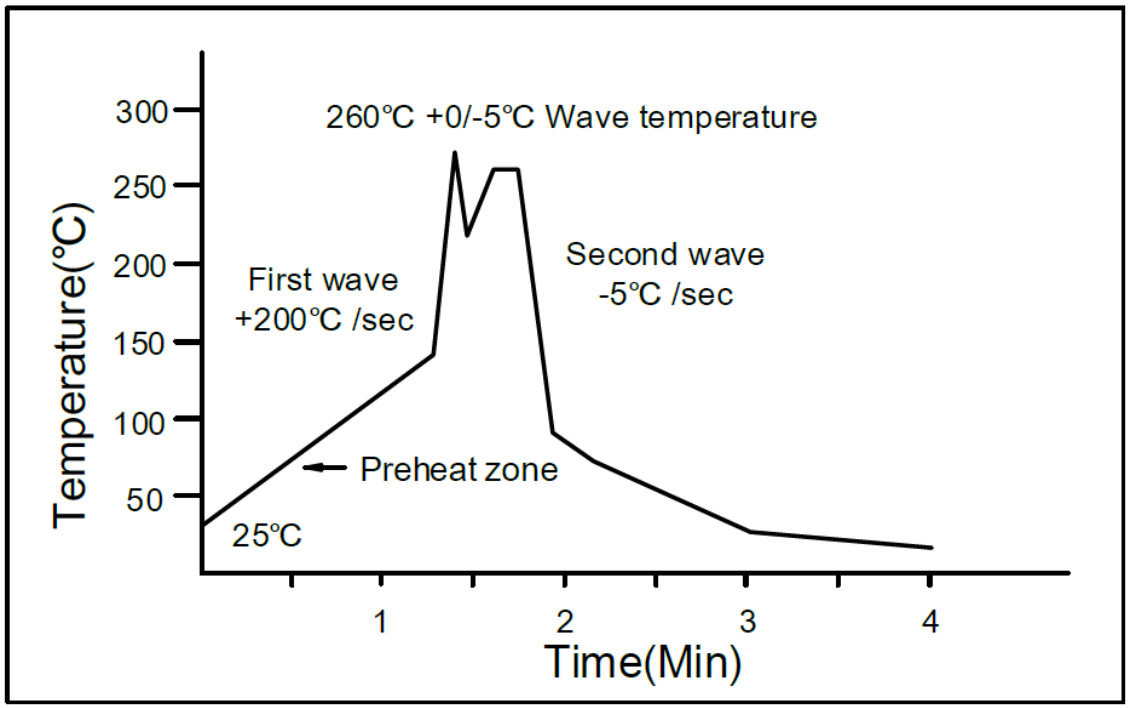


## Iron soldering (follow the standard MIL-STD 202G, Method 210F)

Allow single lead soldering in every single process.
One time soldering is recommended. Temperature: 350+±10˚C
Time: 5 sec max.

## Reflow Profile

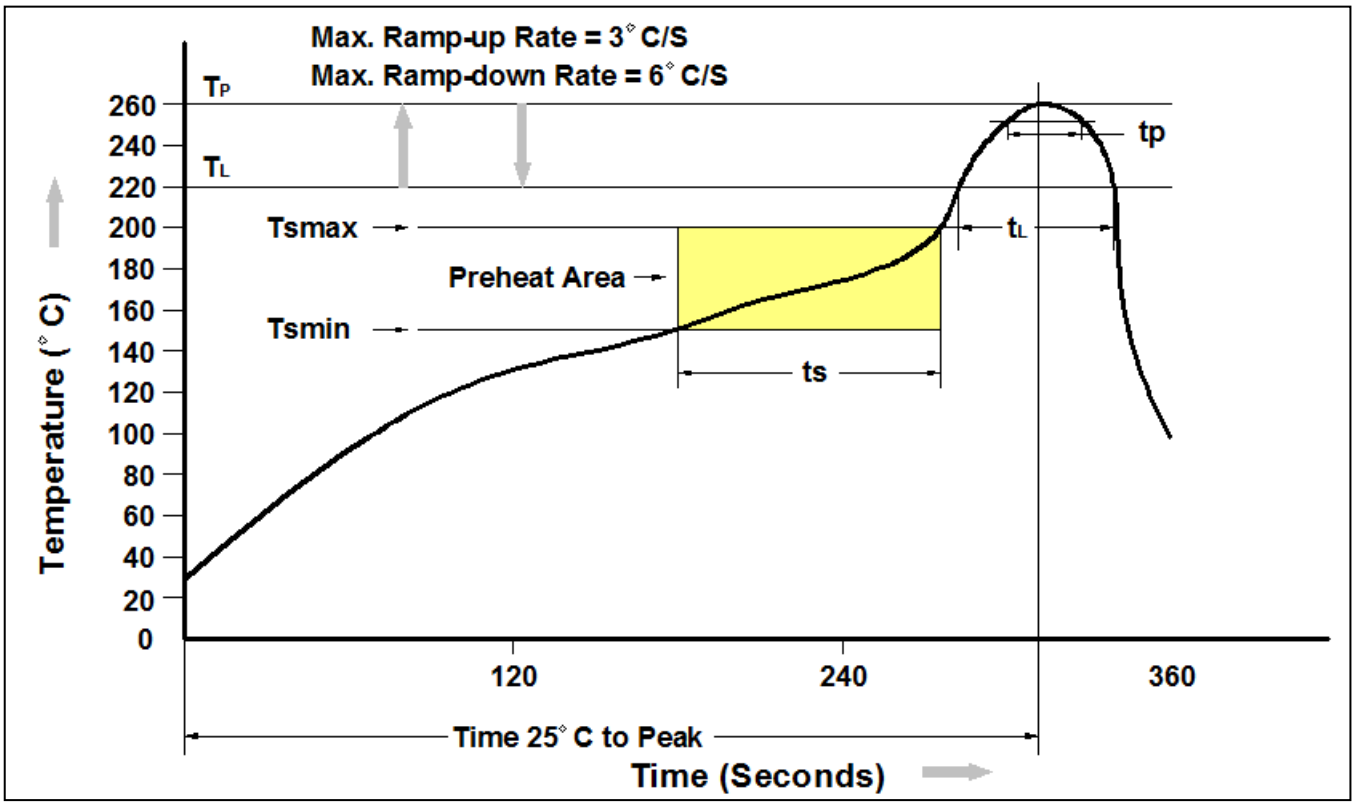


| Profile Feature | Pb-Free Assembly Profile |
|---|---|
| Temperature Min. (Tsmin) | 150°C |
| Temperature Max. (Tsmax) | 200°C |
| Time (ts) from (Tsmin to Tsmax) | 60-120 seconds |
| Ramp-up Rate ($t_L$ to $t_P$) | 3°C/second max. |
| Liquidous Temperature ($T_L$) | 217°C |
| Time ($t_L$) Maintained Above ($T_L$) | 60 – 150 seconds |
| Peak Body Package Temperature | 260°C +0°C / -5°C |
| Time ($t_P$) within 5°C of 260°C | 30 seconds |
| Ramp-down Rate ($T_P$ to $T_L$) | 6°C/second max |
| Time 25°C to Peak Temperature | 8 minutes max. |

## DISCLAIMER

**CT MICRO RESERVES THE RIGHT TO MAKE CHANGES WITHOUT FURTHER NOTICE TO ANY PRODUCTS HEREIN TO IMPROVE RELIABILITY, FUNCTION OR DESIGN. CT MICRO DOES NOT ASSUME ANY LIABILITY ARISING OUT OF THE APPLICATION OR USE OF ANY PRODUCT OR CIRCUIT DESCRIBED HEREIN; NEITHER DOES IT CONVEY ANY LICENSE UNDER ITS PATENT RIGHTS, NOR THE RIGHTS OF OTHERS.**

---

**CT MICRO ARE NOT AUTHORIZED FOR USE AS CRITICAL COMPONENTS IN LIFE SUPPORT DEVICES OR SYSTEMS WITHOUT EXPRESS WRITTEN APPROVAL OF CT MICRO INTERNATIONAL CORPORATION.**

1. *Life support devices or systems are devices or systems which, (a) are intended for surgical implant into the body, or (b) support or sustain life, or (c) whose failure to perform when properly used in accordance with instruction for use provided in the labelling, can be reasonably expected to result in significant injury to the user.*
2. *A critical component is any component of a life support device or system whose failure to perform can be reasonably expected to cause the failure of the life support device or system, or to affect its safety or effectiveness.*