CTMLA4064YG1

3mm Assembly LED

Features

- 3mm Assembly Yellow Green LED
- Viewing Angle = 60°
- Compatible with infrared and vapor phase reflow solder process
- High reliability
- Ultra bright Yellow Green
- RoHS compliance

Description

The CTMLA4064YG1 is an AlGaInP Yellow Green LED housed in a miniature LAMP package. The device has a dominant wavelength of 573nm LED.

Applications

- Optical indicator.
- Switch and Symbol Display

Package Outline

Anode Cathode

Schematic

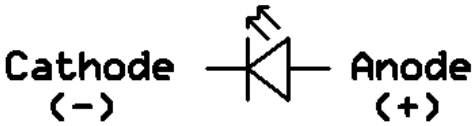

Absolute Maximum Rating at 25^{0}C

Symbol	Parameters	Ratings	Units	Notes
I_F	Continuous Forward Current	25	mA	
I_{FP}	Peak Forward Current	60	mA	1
V_R	Reverse Voltage	5	V	
T_{opr}	Operating Temperature	-40 ~ +85	^{0}C	
T_{stg}	Storage Temperature	-40 ~ +100	^{0}C	
T_{sol}	Soldering Temperature	260	^{0}C	2
P_D	Power Dissipation at(or below) 25℃Free Air Temperature	60	mW	

Electro-Optical Characteristics *TA = 25°C (unless otherwise specified)*

Optical Characteristics

Symbol	Parameters	Test Conditions	Min	Typ	Max	Units	Notes
Iv	Radiant Intensity	I_F=20mA	16	32	-	mcd	1
λp	Peak Wavelength	I_F=20mA	-	573	-	nm	
2θ1/2	Viewing Angle	I_F=20mA	-	60	-	deg	

Electrical Characteristics

Symbol	Parameters	Test Conditions	Min	Typ	Max	Units	Notes
V_F	Forward Voltage	I_F=20mA	-	2.0	2.4	V	
I_R	Reverse Current	V_R=5V	-	-	10	μA	

Notes:

1. IP Conditions—Pulse Width ≤100us and Duty≤10%.
2. Soldering time ≤ 5 seconds.

Typical Characteristic Curves

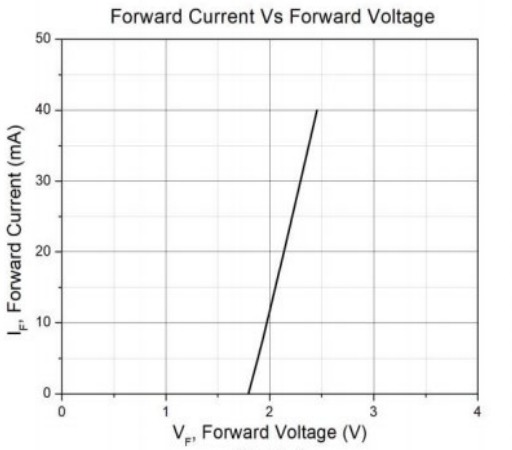

Figure 1

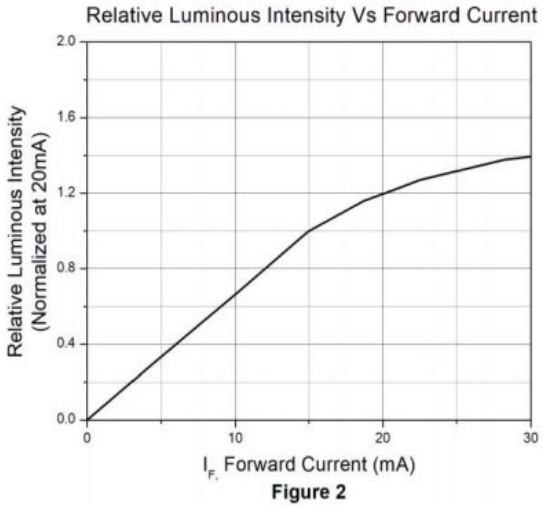

Figure 2

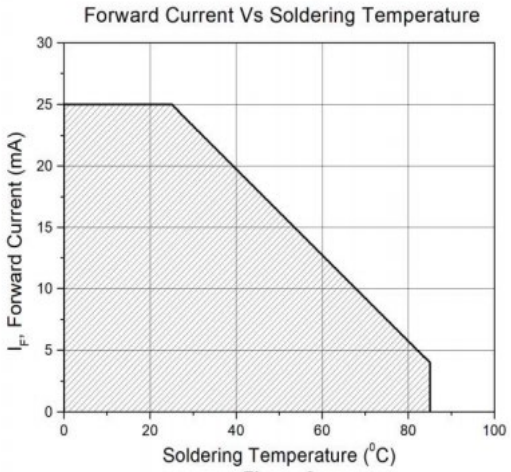

Figure 3

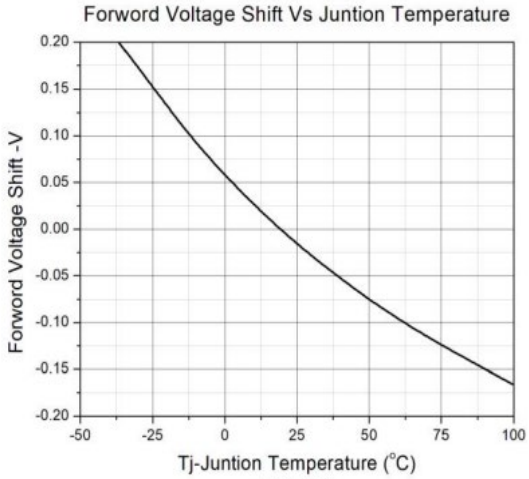

Figure 4

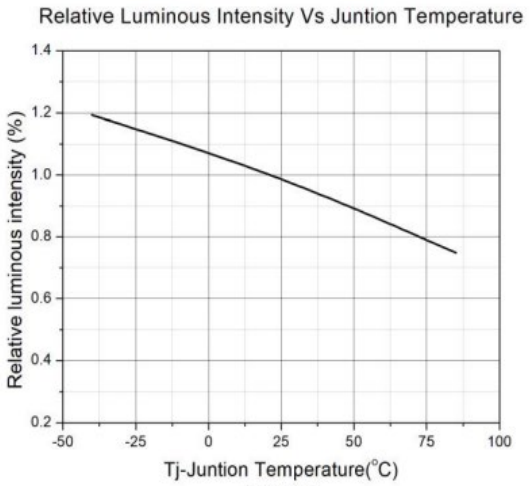

Figure 5

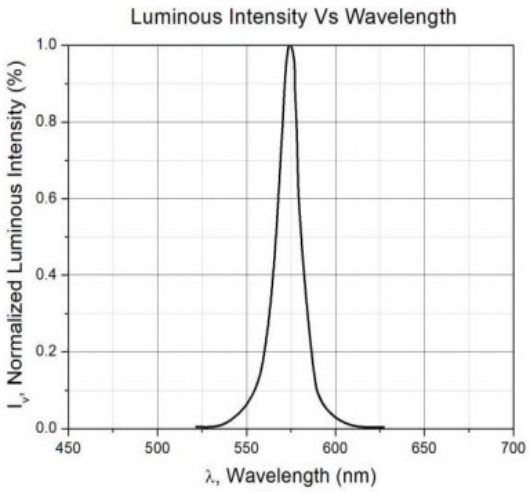

Figure 6

Typical Characteristic Curves

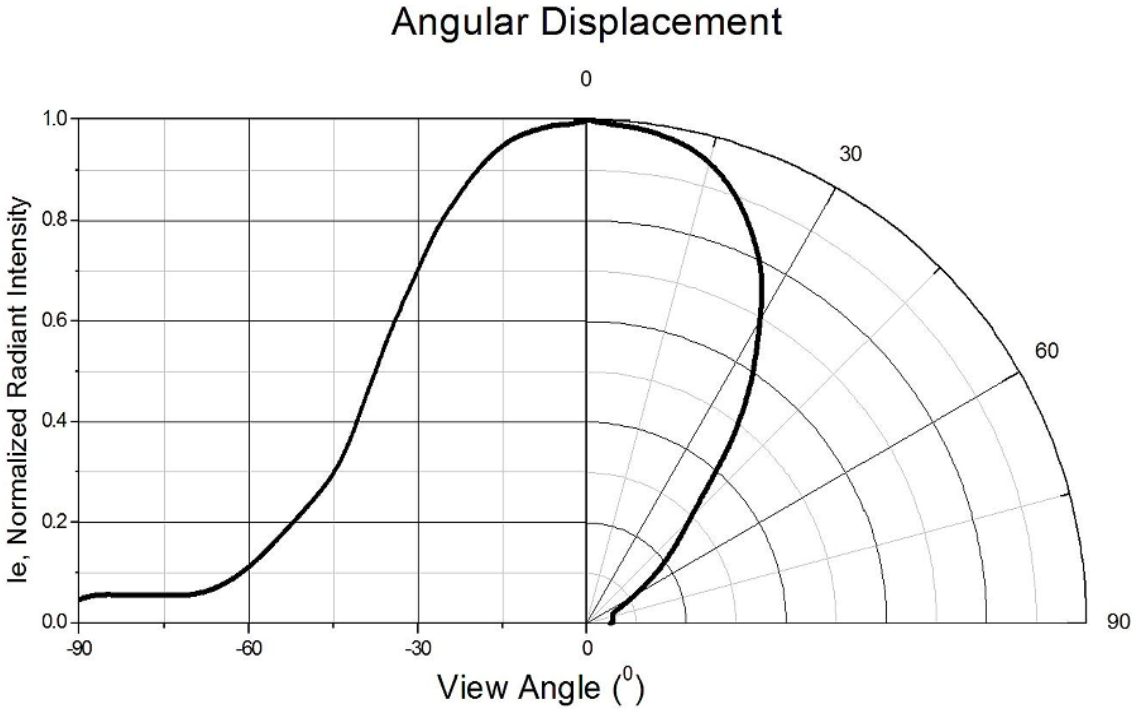

Figure 7

Package Dimension *All dimensions are in mm, unless otherwise stated.*

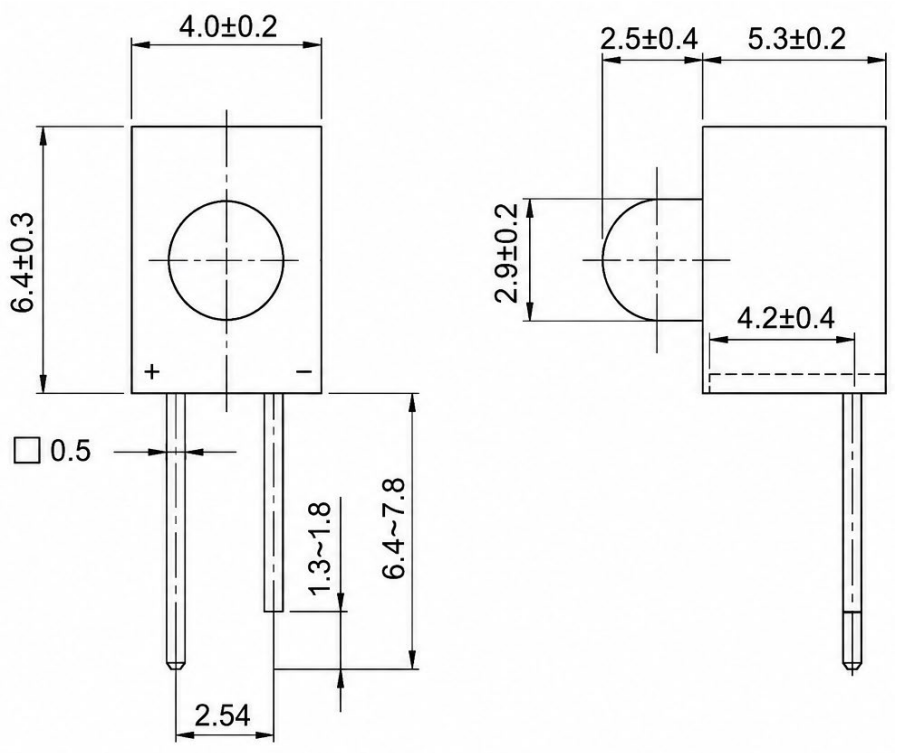

Ordering Information

CTMLA4064YG1

Part Number	*Description*	*Quantity*
CTMLA4064YG1	1 Bag	500 pcs

Packing Specification

Bag

Inner Carton

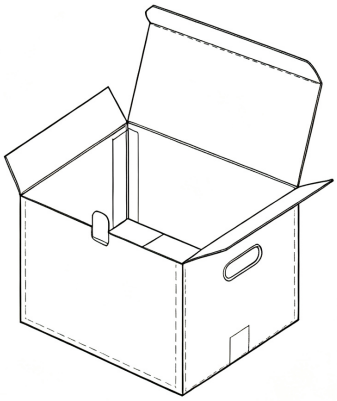

Outside Carton

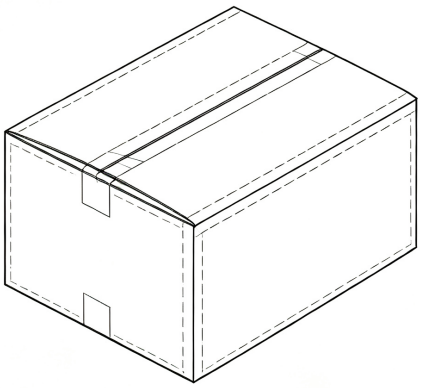

Dimension

Dimension	Length (L)	Width (W)	Height (H)
Inner Carton	22	15	9
Outside Carton	49	33	25

Unit: cm

Packing Quantity
500 PCS/1 Bag, 6 Bags/1 Inner Carton, 10 Inner Cartons/1 Outside Carton

Label Form Specification

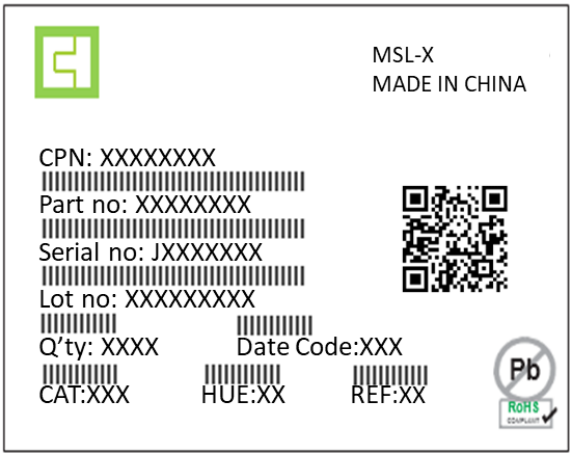

CPN : Customer Part Number

Part no: CTM Production Number

Serial no: Production Number

Lot no: Lot number

Q'ty: Packing Quantity

Date Code: Manufacture Date

CAT : Ranks

HUE: Bin Code of Chromaticity Coordinates

REF : Bin Code of Reference

MADE IN CHINA: Production Place

Storage Condition

1. Do not open moisture proof bag before the products are ready to use.
2. The moisture barrier bag should be stored at 30°C and 90%R.H. max. before opening. Shelf life of non-opened bag is 12 months after the bag sealing date.
3. After opening the moisture barrier bag floor life is 1 year at 30°C/60%RH. max. Unused LEDs should be resealed into moisture barrier bag. (Refer to J-STD-020 Standard)
4. If the moisture absorbent material has faded away or the LEDs have exceeded the storage time, baking treatment should be performed using the J-STD-033 Standard conditions.

Wave soldering (follow the JEDEC standard JESD22-A111)

One time soldering is recommended within the condition of temperature.
Temperature: 260+0/-5˚C.
Time: 10 sec.
Preheat temperature:25 to 140˚C.
Preheat time: 30 to 80 sec.

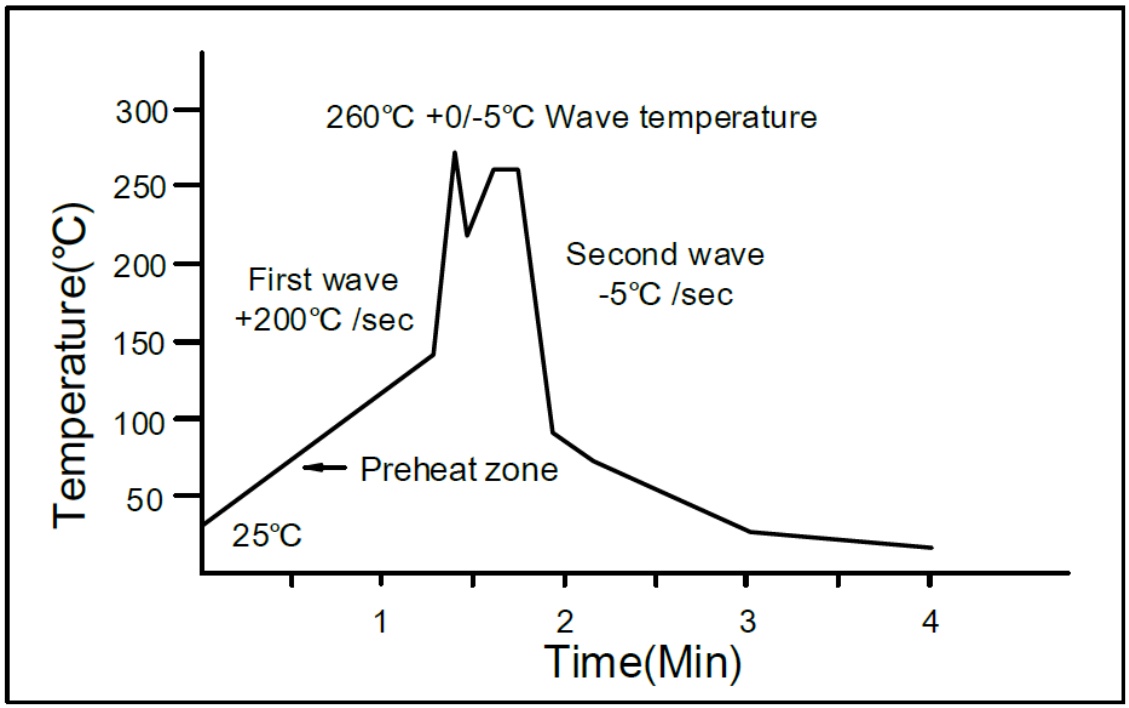

Iron soldering (follow the standard MIL-STD 202G, Method 210F)

Allow single lead soldering in every single process.
One time soldering is recommended. Temperature: 350+±10˚C
Time: 5 sec max.

Reflow Profile

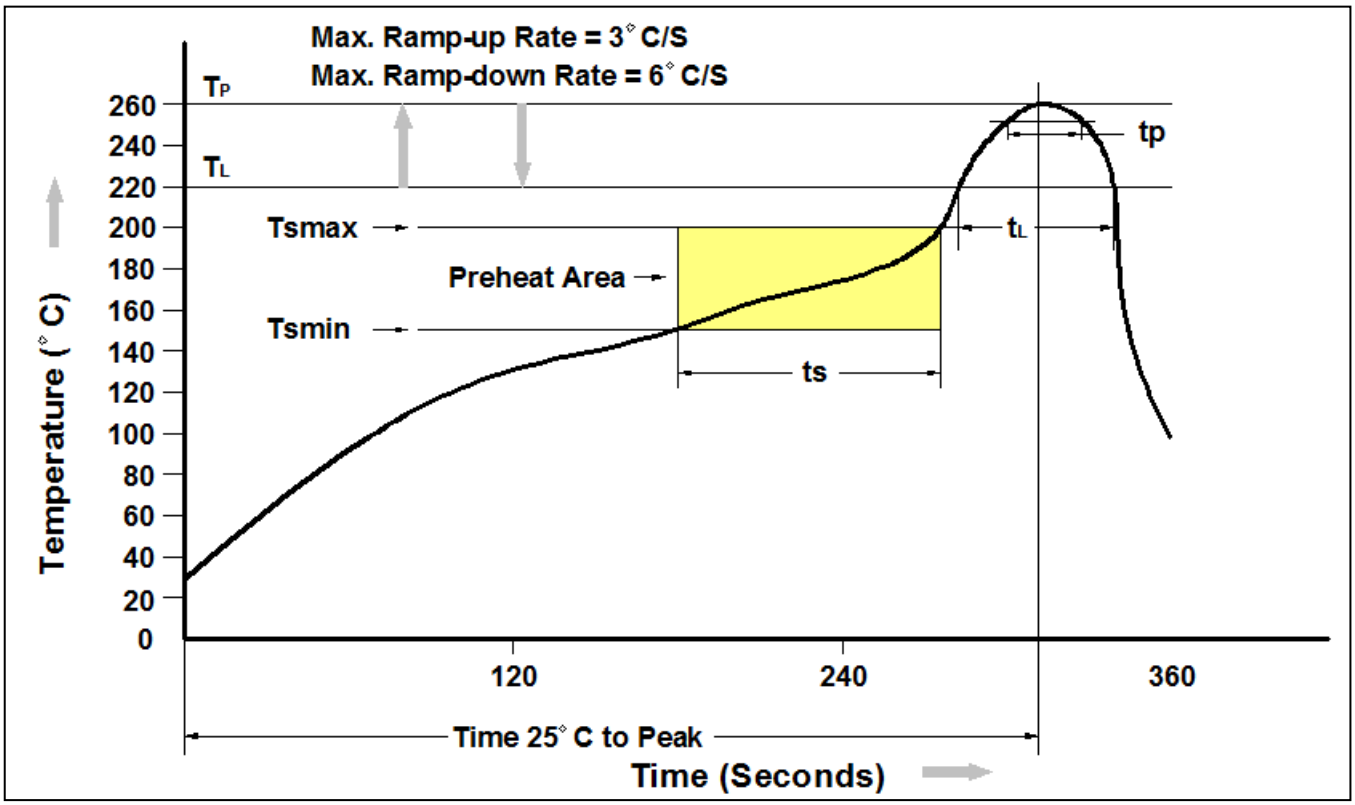

Profile Feature	Pb-Free Assembly Profile
Temperature Min. (Tsmin)	150°C
Temperature Max. (Tsmax)	200°C
Time (ts) from (Tsmin to Tsmax)	60-120 seconds
Ramp-up Rate (t_L to t_P)	3°C/second max.
Liquidous Temperature (T_L)	217°C
Time (t_L) Maintained Above (T_L)	60 – 150 seconds
Peak Body Package Temperature	260°C +0°C / -5°C
Time (t_P) within 5°C of 260°C	30 seconds
Ramp-down Rate (T_P to T_L)	6°C/second max
Time 25°C to Peak Temperature	8 minutes max.

DISCLAIMER

CT MICRO RESERVES THE RIGHT TO MAKE CHANGES WITHOUT FURTHER NOTICE TO ANY PRODUCTS HEREIN TO IMPROVE RELIABILITY, FUNCTION OR DESIGN. CT MICRO DOES NOT ASSUME ANY LIABILITY ARISING OUT OF THE APPLICATION OR USE OF ANY PRODUCT OR CIRCUIT DESCRIBED HEREIN; NEITHER DOES IT CONVEY ANY LICENSE UNDER ITS PATENT RIGHTS, NOR THE RIGHTS OF OTHERS.

CT MICRO ARE NOT AUTHORIZED FOR USE AS CRITICAL COMPONENTS IN LIFE SUPPORT DEVICES OR SYSTEMS WITHOUT EXPRESS WRITTEN APPROVAL OF CT MICRO INTERNATIONAL CORPORATION.

1. *Life support devices or systems are devices or systems which, (a) are intended for surgical implant into the body, or (b) support or sustain life, or (c) whose failure to perform when properly used in accordance with instruction for use provided in the labelling, can be reasonably expected to result in significant injury to the user.*
2. *A critical component is any component of a life support device or system whose failure to perform can be reasonably expected to cause the failure of the life support device or system, or to affect its safety or effectiveness.*