P-Channel 30-V(D-S) MOSFET

V(BR)DSS	RDS(on)MAX	ID
-30 V	60mΩ@-10V	- 4.1A
	70mΩ@-4.5V	
	100mΩ@-2.5V	

FEATURE

※ TrenchFET Power MOSFET
※ Exceptional on-resistance and maximum DC current capability
※ High dense cell design for extremely low RDS(ON)

APPLICATION

※ Load Switch for Portable Devices
※ DC/DC Converter

MARKING

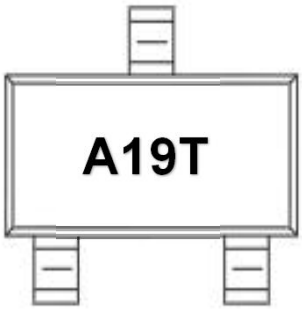

Equivalent Circuit

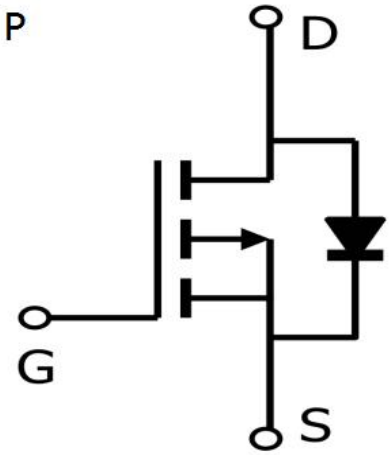

SOT- 23

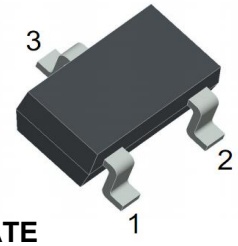

1.GATE
2.SOURCE
3.DRAIN

Maximum ratings (Ta=25℃ unless otherwise noted)

Parameter	Symbol	Value	Unit
Drain-Source Voltage	VDS	-30	V
Gate-Source Voltage	VGS	±12	
Continuous Drain Current	ID	-4.1	A
Pulsed Diode Curren	IDM	-27	
Continuous Source-Drain Current(Diode Conduction)	IS	-2	
Power Dissipation	PD	1.4	W
Thermal Resistance from Junction to Ambient (t≤5s)	RθJA	125	℃/W
Operating Junction	TJ	150	℃
Storage Temperature	TSTG	-55~+150	℃

MOSFET ELECTRICAL CHARACTERISTICS

Static Electrical Characteristics (Ta = 25 ℃ Unless Otherwise Noted)

Parameter	Symbol	Test Condition	Min	Typ	Max	Unit
Static						
Drain-source breakdown voltage	V(BR)DSS	VGS = 0V, ID = -250μA	-30			V
Gate-source threshold voltage	VGS(th)	VDS =VGS, ID = -250μA	-0.6		-1.2	V
Gate-source leakage	IGSS	VDS =0V, VGS = ±12V			±100	nA
Zero gate voltage drain current	IDSS	VDS = -30V, VGS =0V			1	μA
Drain-source on-state resistancea	RDS(on)	VGS = -10V, ID = -2.8A		50	60	mΩ
		VGS = -4.5V, ID = -2.8A		55	70	mΩ
		VGS = -2.5V, ID = -2A		71	100	mΩ
Forward transconductancea	gfs	VDS = -4.5V, ID = -4.1A	7			S
Diode forward voltage	VSD	IS=1A,VGS=0V		-0.7	-1.3	V
Dynamic						
Input capacitance	Ciss	VDS = -15V,VGS =0V, f=1MHz		645		pF
Output capacitance	Coss			80		pF
Reverse transfer capacitanceb	Crss			55		pF
Total gate charge	Qg	VDS = -15V,VGS = -10V, ID =-4.1A		14		nC
Gate-source charge	Qgs			1.5		nC
Gate-drain charge	Qgd			2.5		nC
Gate resistance	Rg	f=1MHz		8		Ω
Switchingb						
Turn-on delay time	td(on)	VDD= -15V RL=4Ω, ID ≈ -1A, VGEN=- 10V,Rg=3Ω		6.3		ns
Rise time	tr			3.2		ns
Turn-off delay time	td(off)			41		ns
Fall time	tf			9		ns
Drain-source body diode characteristics						
Continuous Source-Drain Diode Current	IS	Tc=25℃			-1.3	A
Pulsed Diode forward Curren	ISM				-20	A

Note :

1. Repetitive Rating : Pulse width limited by maximum junction temperature.
2. Surface Mounted on FR4 Board, t < 5 sec.
3. Pulse Test : Pulse Width≤300μs, Duty Cycle ≤ 2%.
4. Guaranteed by design, not subject to production testing.

Typical Characteristics:

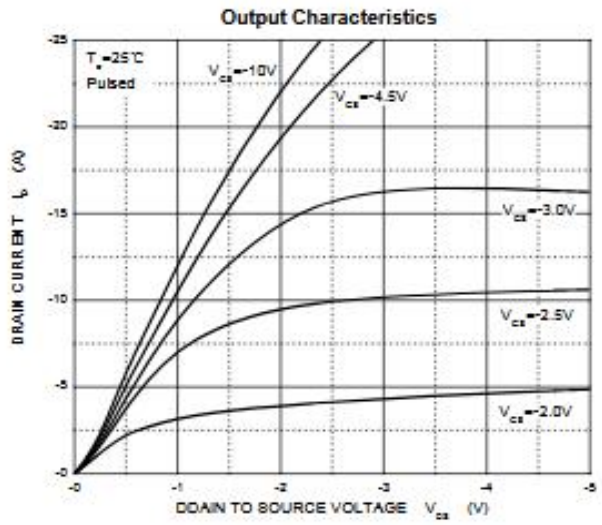

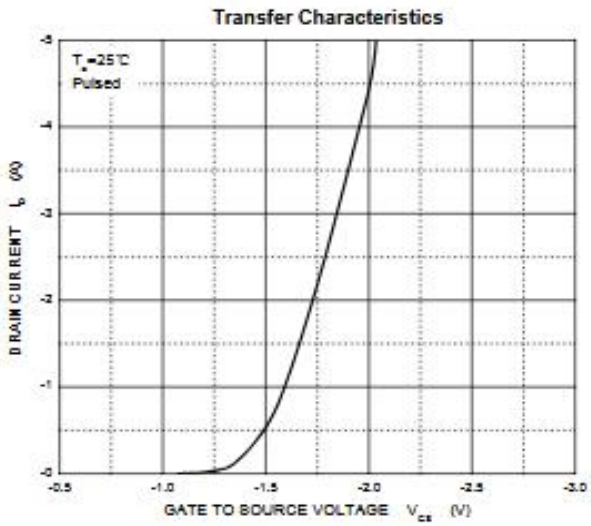

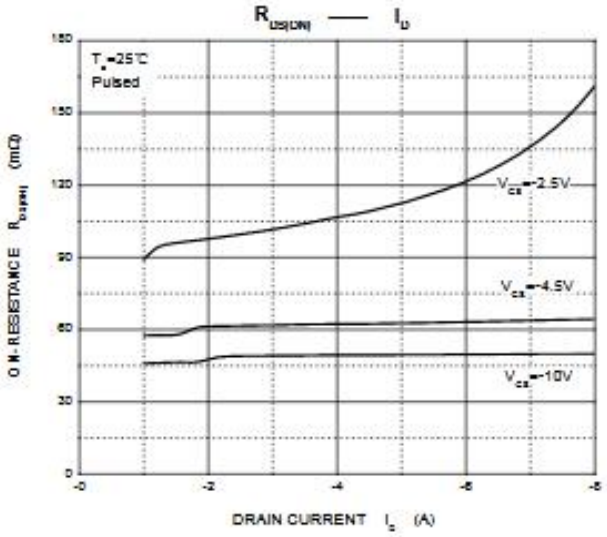

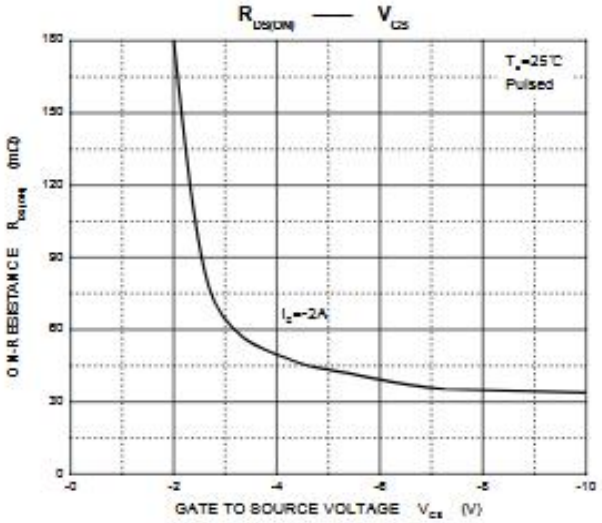

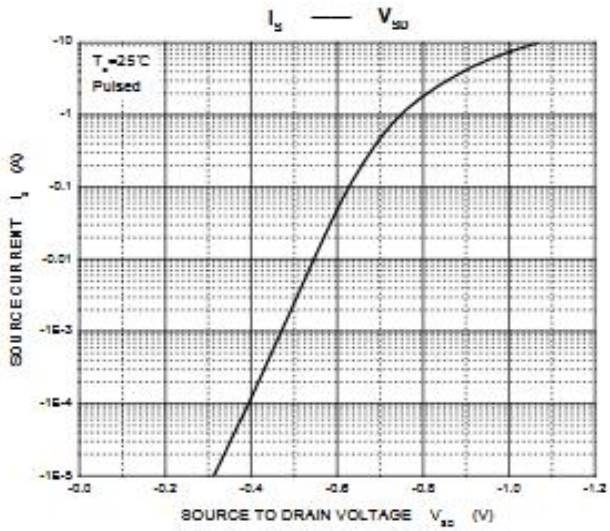

SOT-23 PACKAGE OUTLINE DIMENSIONS

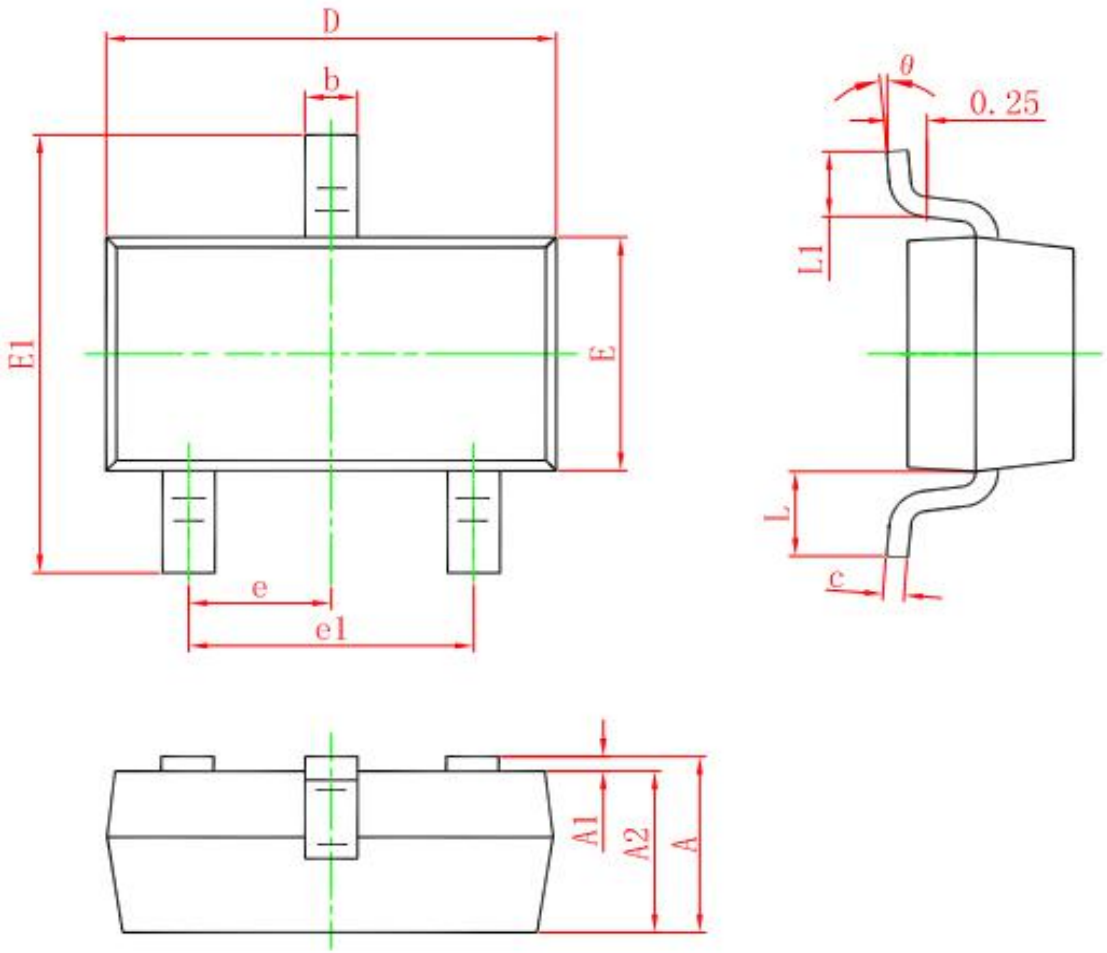

Symbol	Dimensions In Millimeters		Dimensions In Inches	
	Min.	Max.	Min.	Max.
A	0.900	1.150	0.035	0.045
A1	0.000	0.100	0.000	0.004
A2	0.900	1.050	0.035	0.041
b	0.300	0.500	0.012	0.020
c	0.080	0.150	0.003	0.006
D	2.800	3.000	0.110	0.118
E	1.200	1.400	0.047	0.055
E1	2.250	2.550	0.089	0.100
e	0.950 TYP.		0.037 TYP.	
e1	1.800	2.000	0.071	0.079
L	0.550 REF.		0.022 REF.	
L1	0.300	0.500	0.012	0.020
θ	0°	8°	0°	8°