REV.	DESCRIPTION	ECN NO.	NAME	DATE

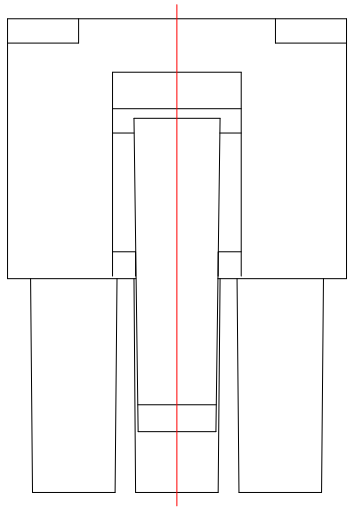

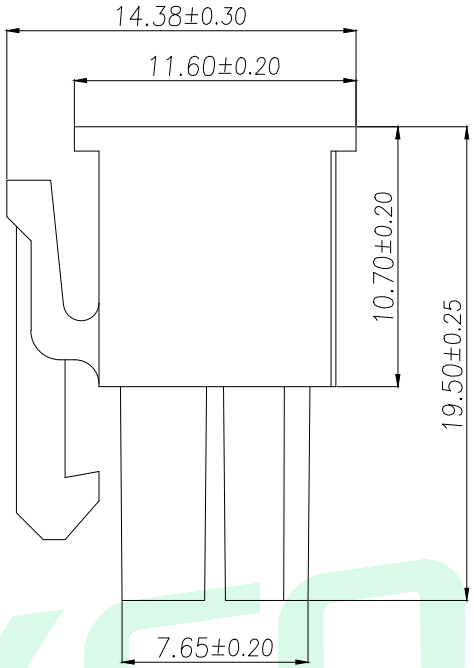

型号	CKT	A	B
WF-1D420A02P-B	2*1	0.00	5.50
WF-1D420A04P-B	2*2	4.20	9.70
WF-1D420A06P-B	2*3	8.40	13.90
WF-1D420A08P-B	2*4	12.60	18.10
WF-1D420A10P-B	2*5	16.80	22.30
WF-1D420A12P-B	2*6	21.00	26.50
WF-1D420A14P-B	2*7	25.20	30.70
WF-1D420A16P-B	2*8	29.40	34.90
WF-1D420A18P-B	2*9	33.40	39.10
WF-1D420A20P-B	2*10	37.80	43.30
WF-1D420A22P-B	2*11	42.00	47.50
WF-1D420A24P-B	2*12	46.20	51.70

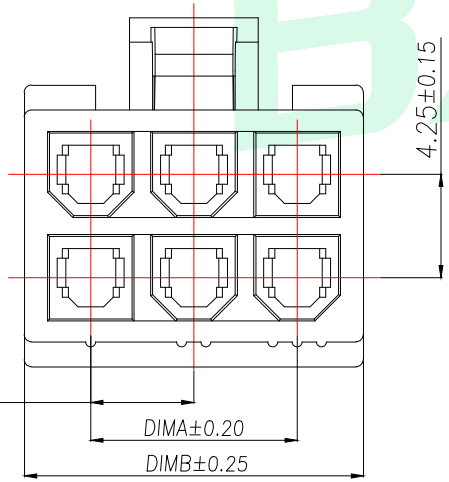

技术指标:

1.温度范围:-25°C~85°C.
2.额定电压:250V AC,DC.
3.耐电压:1500V AC/minute.
4.接触电阻:≤20mΩ .
5.绝缘电阻:≥1000MΩ.
6.额定电流: 5A AC,DC.

材料:

1.塑胶:PA66 黑色

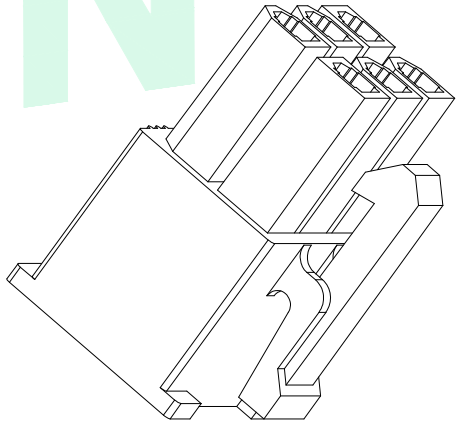

GENERAL TOLERANCE					
DIM.	TOL.				
.x	±0.30				
.xx	±0.25				
.xxx	±0.15				
GENERAL ANGLE:					
x.°	±5°				
x.x°	±1°				

DONGGUAN BAOXUN PRECISION TECHNOLOGY CO., LTD

BXCONN®

TITLE: WBM4.2MM HOUSING

DWG. NO.: WF-1D420AXP-B

CHECKED: MAX

PART NO.: WF-1D420AXP-B

DRAWN: ELLA

UNIT:	SCALE:	SHEET:	DWG. SIZE:	LAYER:
mm	none	1of 1	A4	bxconn

APPROVED: WILL