REV.	DESCRIPTION	ECN NO.	NAME	DATE

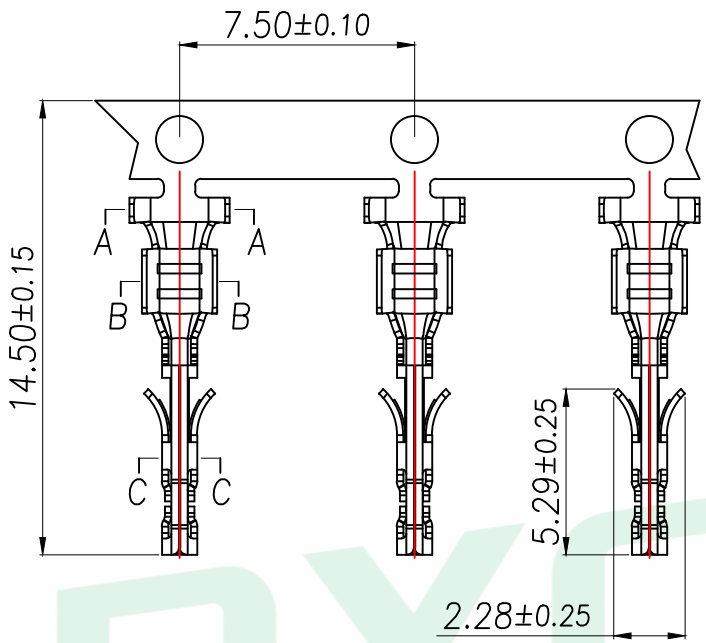

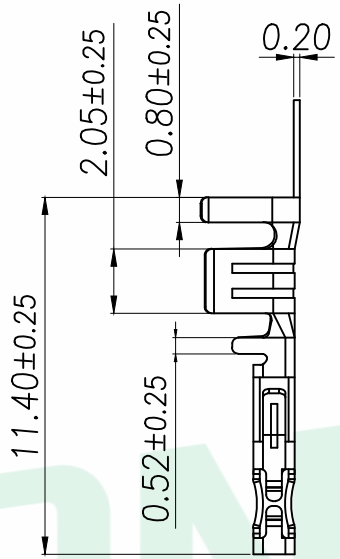

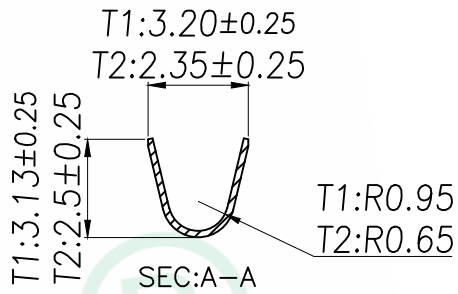

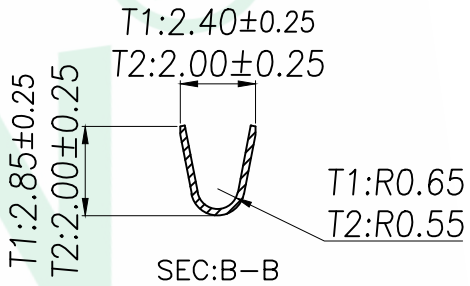

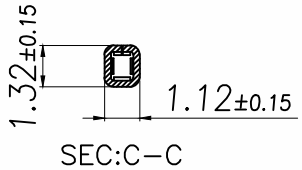

技术指标(Technical Index):

1.工作温度(Temperature range):-25°C~85°C.

2.额定电压(Rated voltage):250V DC/AC(rms).

3.额定电流(Rated current): 9.5A(AWG#16~#18) AC,DC.

4.接触电阻(Contact resistance):≤20mΩ.

5.耐压值(Dielectricwithstanding voltage):1500V AC/minute.

6.绝缘电阻(Insulation resistance):≥1000MΩ.

7.适用线规(Apply to gauge):T1:AWG#16~#18.
T2:AWG#20~#24.

序号	品名	材质
1	端子	Phosphor Bronze Bright tin plated

GENERAL TOLERANCE					
DIM. TOL. x. ±0.50 x.x ±0.20 x.xx ±0.10 GENERAL ANGLE: ±1°	DONGGUAN BAOXUN PRECISION TECHNOLOGY CO., LTD				BXCONN®
	TITLE: MX3.0公头端子(大电流)				
	DWG. NO.: WF-1C300C			CHECKED: MAX	
	PART NO.: WF-1C300C			DRAWN: ELLA	
	UNIT: mm	SCALE: none	SHEET: 1of 1	DWG. SIZE: A4	LAYER: bxconn	APPROVED: WILL