REV.	DESCRIPTION	ECN NO.	NAME	DATE

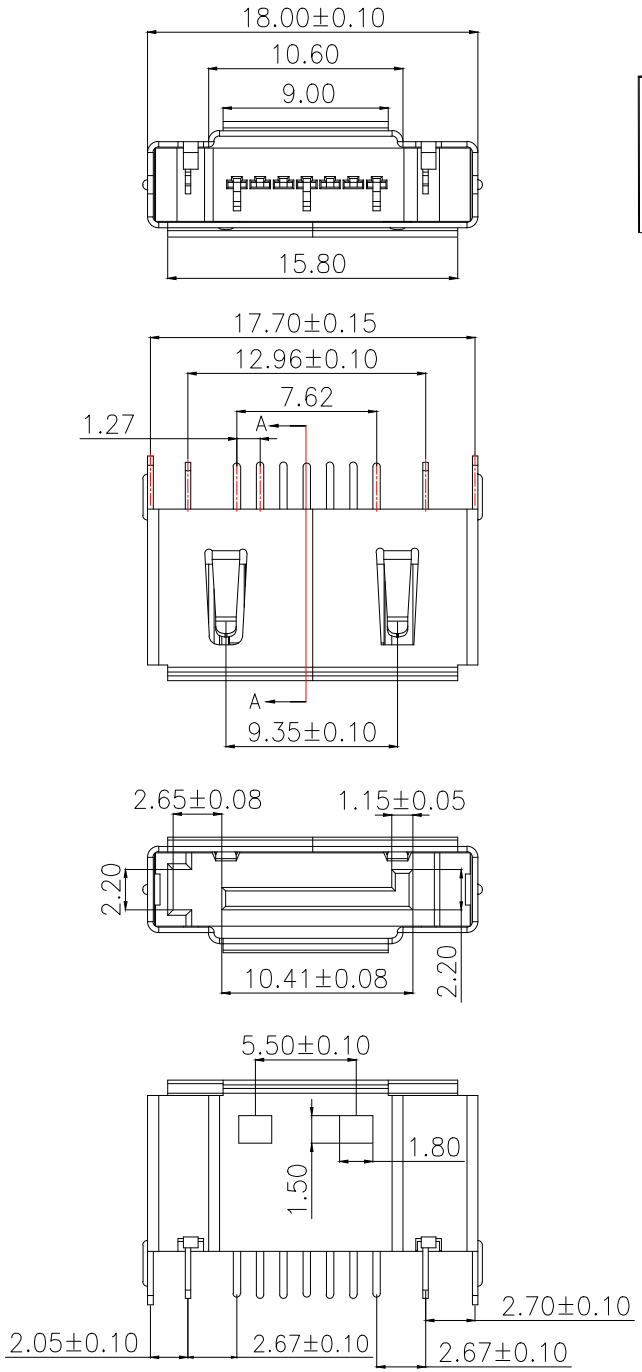

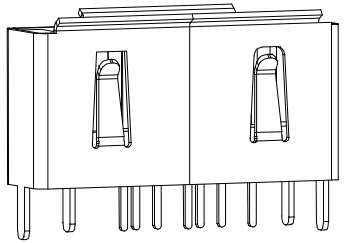

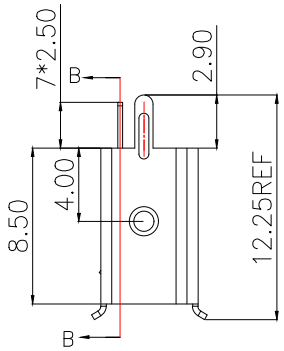

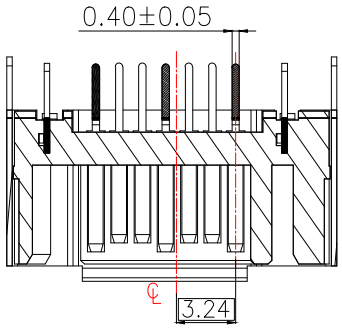

剖面 B−B

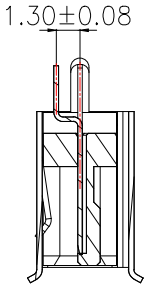

剖面 A−A

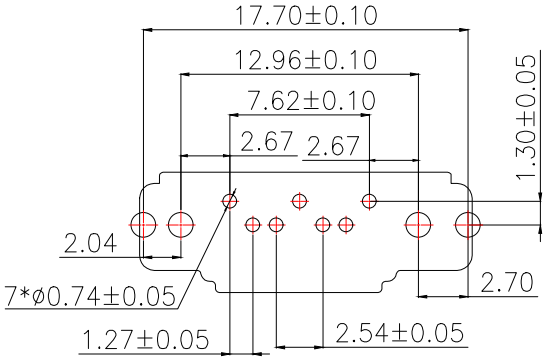

PCB LAYOUT

SPECIFICATION:
MATERIAL:
HOUSING: LCP 30% G/F UL 94V−0
COLOR:BLACK
CONTACT: PHOSPHOR BRONZE C2680 H,T=0.25mm
PEG: BRASS C2680R H,T=0.30mm
SHELL: spcc,T=0.30mm
FINISH:
CONTACT: G/F GOLD/TIN PLATING ON CONTACT AREA
100u" MIN. Matte TIN PLATING ON SOLDERTAILS
50u" MIN. NICKEL UNDERPLATING OVERALL
PEG:100u" MIN. Matte TIN PLATING ON SOLDERTAILS
50u" MIN. NICKEL UNDERPLATING OVERALL
SHELL:100u" MIN. Matte TIN PLATING ON SOLDERTAILS
50u" MIN. NICKEL UNDERPLATING OVERALL

GENERAL TOLERANCE						DONGGUAN BAOXUN PRECISION TECHNOLOGY CO., LTD		BXCONN®
DIM.	TOL.					TITLE: SATA 7P 公座 双柱 AB型 带铁壳		
.X	±0.30							
.XX	±0.20							
.XXX	±0.05							
GENERAL	ANGLE:					DWG. NO.: SATA−07G−04GF	CHECKED: MAX	
.X°	±3°							
.XX°	±2°							
.XXX°	±5°					PART NO.: SATA−07G−04GF	DRAWN: ELLA	
		UNIT: mm	SCALE: none	SHEET: 1 of 1	DWG. SIZE: A4	LAYER: bxconn	APPROVED: WILL	