REV.	DESCRIPTION	ECN NO.	NAME	DATE

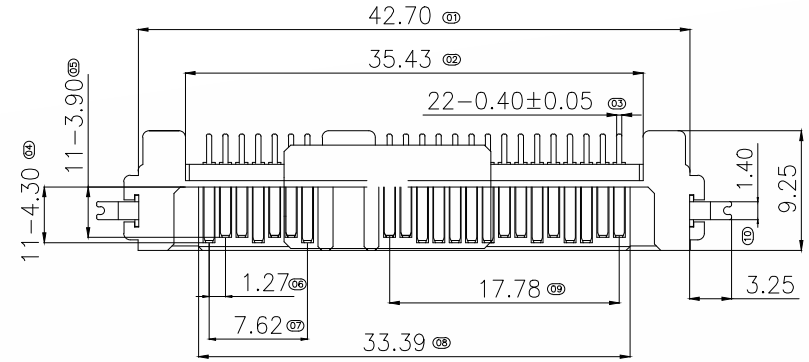

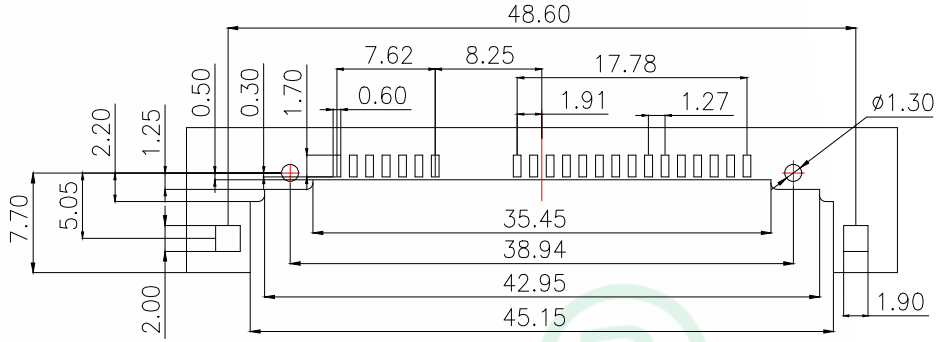

PCB LAYOUT
TOLERANCES:±0.05MM

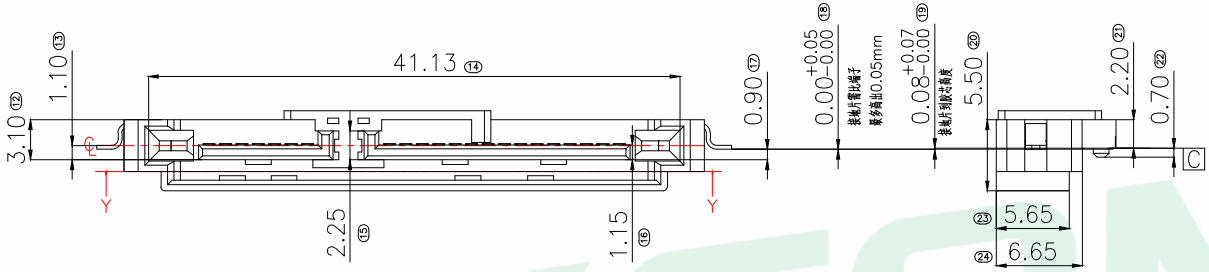

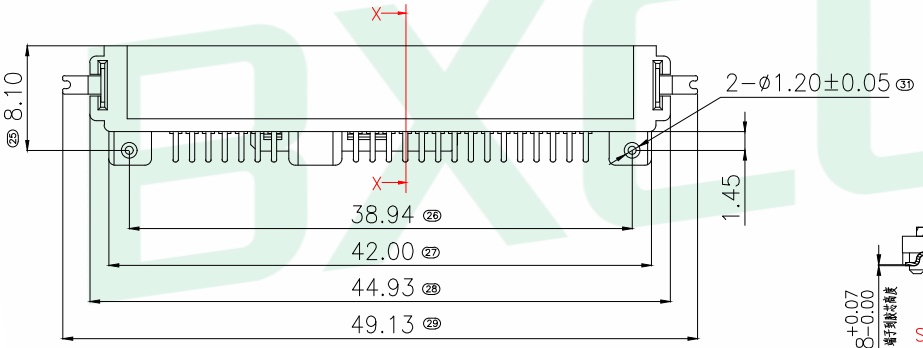

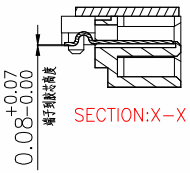

SECTION:X−X

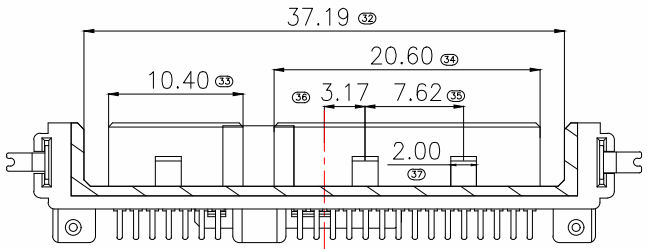

SECTION:Y−Y

SPECIFICATION:

1.MATERIAL:
- HOUSING:LCP 30% G/F UL 94V−0
- COLOR:BLACK
- CONTACT:BRASS C2680R−H,T=0.25mm
- PEG: BRASS C2680R−H,T=0.30mm

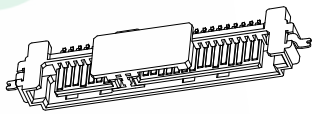

2.FINISH:
- CONTACT:1u",3u",5u",15u"GOLD PLATING ON CONTACT AREA
- 100u" MIN.TIN PLATING ON SOLDERTAILS
- 40u" MIN.NICKEL UNDERPLATING OVER ALL

3.ELECTRICAL:
- CURRENT RATING:1.5 AMPERE PER CONTACT
- CONTACT RESISTANCE:30 MILLIOHMS MAX
- INSULATION RESISTANCE:1000 MEGOHMS MIN
- DIELECTRIC WITH STANDING VOVTAGE:500 VDC
- OPERATING TEMPERATURE: −40°C ~ +85°C

4.THE MARK ⓧⓧ DIMENSIONS MUST BE MEASURED BY FAI.

	环保要求	产品必须符合ROHS要求		
3	Peg	Brass C2680		Tin/Ni Plated
2	Terminal	Brass C2680		Gold/Tin Plated
1	Housing	High Temp	Black	UL 94V−0
NO.	DESCRIPTION	MATERIAL	COLOR	REMARK

GENERAL TOLERANCE					
DIM.	TOL.	DONGGUAN BAOXUN PRECISION TECHNOLOGY CO., LTD			BXCONN®
.X	±0.30	TITLE: SATA7+15P 公座 沉板式 SMT H0.9(半包式)			
.XX	±0.20				
.XXX	±0.05				
GENERAL	ANGLE:	DWG. NO.: SATA−22G−21CB09		CHECKED: MAX	
.X°	±3°				
.XX°	±2°	PART NO.: SATA−22G−21CB09		DRAWN: ELLA	
.XXX°	±0.5°				
UNIT: mm	SCALE: none	SHEET: 1 of 1	DWG. SIZE: A4	LAYER: bxconn	APPROVED: WILL