OSRAM PLT5 516FB

Datasheet

DRAFT – For reference only. Subject to change without notice.

Published by ams-OSRAM AG
Tobelbader Strasse 30, 8141 Premstaetten, Austria
Phone +43 3136 500-0
ams-osram.com
© All rights reserved

OSRAM

Metal Can® TO56

PLT5 516FB

Green Laser Diode in TO56 Package

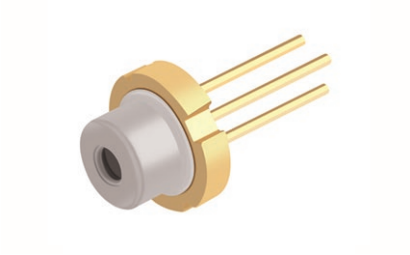

Applications

- Appliances & Tools
- Entertainment
- Functional Illumination
- Outdoor & Industrial Lighting
- Projection

Features

- Optical output power (continuous wave): 30 mW (T_C = 25°C)
- Typical emission wavelength: 520 nm
- Efficient radiation source for cw and pulsed operation
- Single mode semiconductor laser
- High modulation bandwidth
- TO56 package
- Laser diode isolated against package
- non hermetic package

DRAFT – For reference only. Subject to change without notice.

Ordering Information

Type	Peak output power typ. P_{opt}	Ordering Code
PLT5 516FB	30 mW	Q65113A4966

DRAFT – For reference only. Subject to change without notice.

Maximum Ratings

T_C = 25 °C

Parameter	Symbol		Values
Operating temperature	T_{op}	min. max.	-20 °C 60 °C
Storage temperature	T_{stg}	min. max.	-40 °C 85 °C
Peak output power [1)]	P_{opt}	max.	35 mW
Reverse voltage [2)]	V_R	max.	2 V
Soldering temperature t_{max} = 10 sec	T_S	max.	260 °C

Operation outside these conditions may damage the device. Operation at the maximum ratings influences lifetime.

DRAFT – For reference only. Subject to change without notice.

Characteristics

P_{opt} = 30 mW; T_c = 25 °C

Parameter	Symbol		Values
Operating current [3]	I_{op}	typ.	80 mA
		max.	100 mA
Peak wavelength [4]	λ_{peak}	min.	510 nm
		typ.	520 nm
		max.	530 nm
Spectral bandwidth (FWHM)	$\Delta\lambda$	typ.	1 nm
Beam divergence (FWHM) parallel to pn-junction	$\Theta_{\parallel}$	min.	6 °
		typ.	8 °
		max.	10 °
Beam divergence (FWHM) perpendicular to pn-junction	$\Theta_{\perp}$	min.	19 °
		typ.	22 °
		max.	25 °
Threshold current	I_{th}	typ.	30 mA
		max.	47 mA
Forward voltage [5][6]	V_F	typ.	5.6 V
		max.	6.5 V
TE polarization	P_{TE}	typ.	100:1
Modulation frequency	f	min.	100 MHz

DRAFT – For reference only. Subject to change without notice.

Dimensional Drawing [7)]

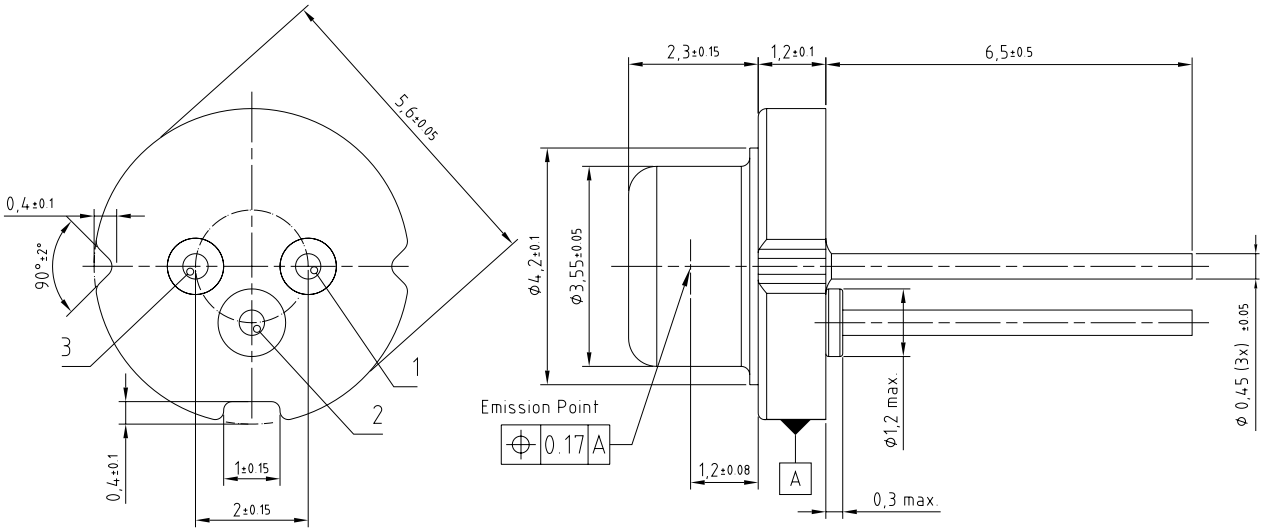

1: LD Anode
2: Case
3: LD Cathode

C63062-A4419-A1-01

Further Information:

Approximate Weight: 313.0 mg

DRAFT – For reference only. Subject to change without notice.

Electrical Internal Circuit

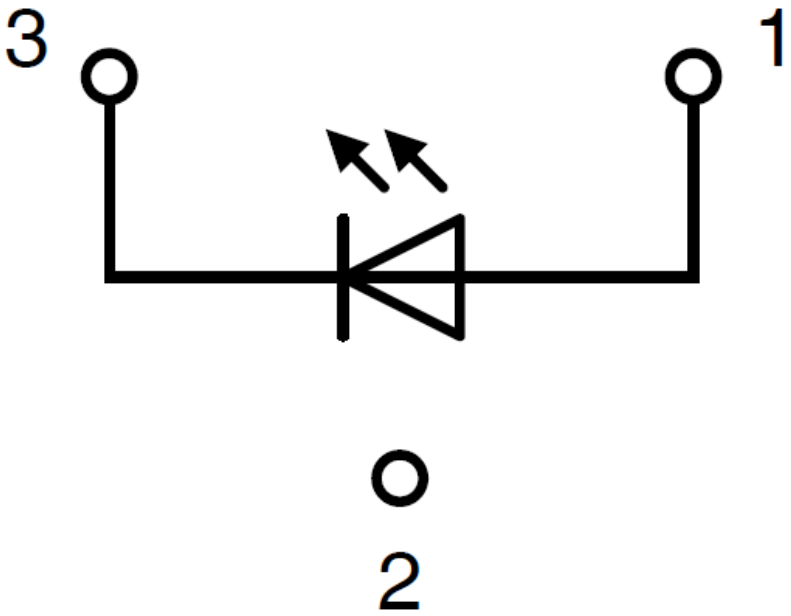

Pin	Description
PIN 1	LD Anode
PIN 2	Case
PIN 3	LD Cathode

DRAFT – For reference only. Subject to change without notice.

Tray [7)]

pieces per tray

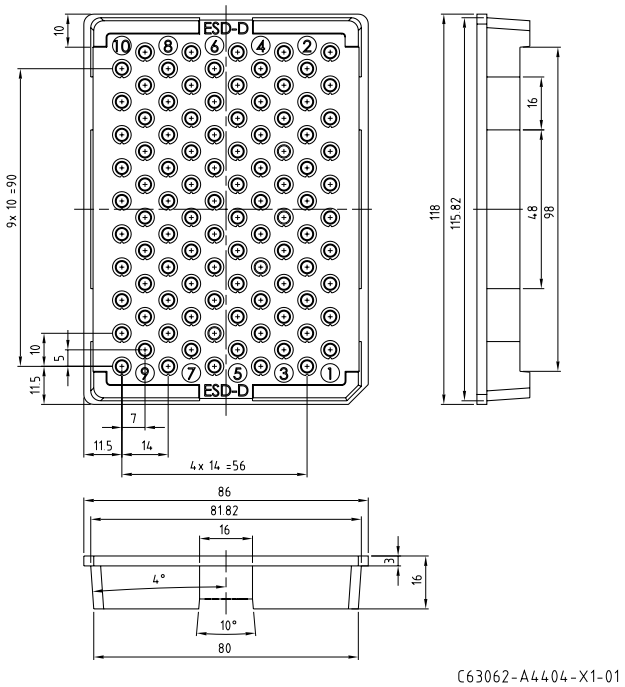

Barcode-Product-Label (BPL)

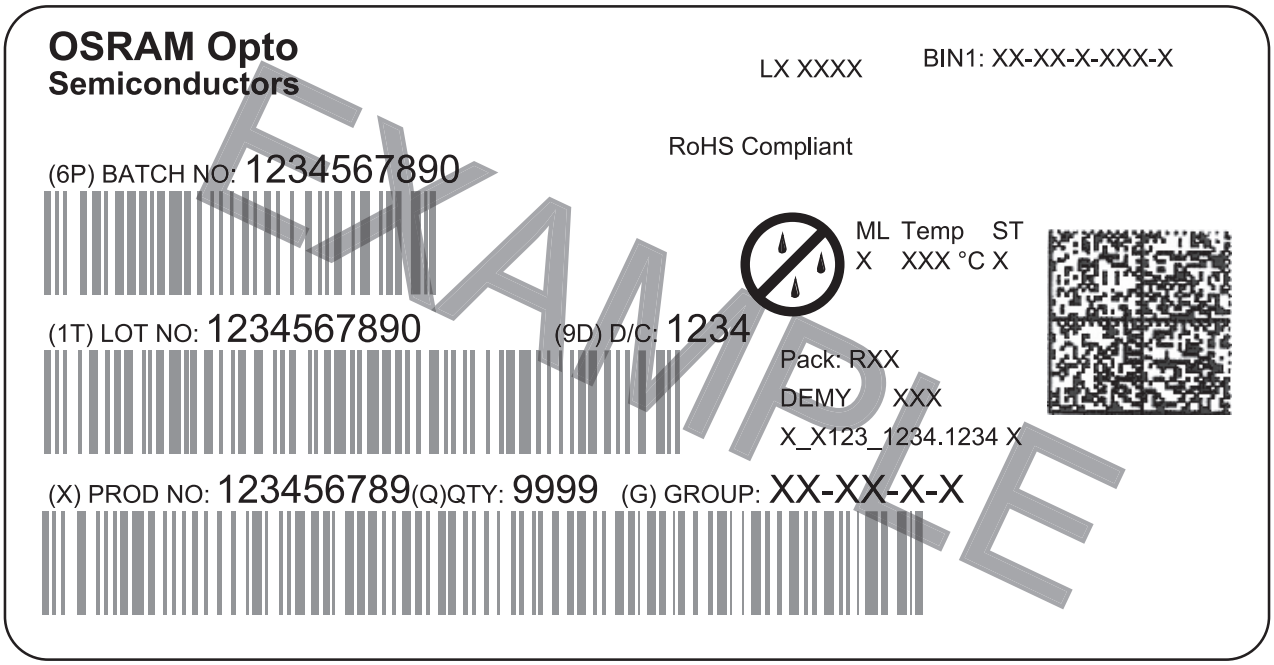

OHA04563

DRAFT – For reference only. Subject to change without notice.

Notes

Depending on the mode of operation, these devices emit highly concentrated visible and non visible light which can be hazardous to the human eye. Products which incorporate these devices have to follow the safety precautions given in IEC 60825-1.

Subcomponents of this device contain, in addition to other substances, metal filled materials including silver. Metal filled materials can be affected by environments that contain traces of aggressive substances. Therefore, we recommend that customers minimize device exposure to aggressive substances during storage, production, and use. Devices that showed visible discoloration when tested using the described tests above did show no performance deviations within failure limits during the stated test duration. Respective failure limits are described in the IEC60810.

Important notes of operation for laser diode

a) Electrical operation

OSRAMs laser diodes are designed for maximum performance and reliability. Operating the laser diode above the maximum rating even for very short periods of time can damage the laser diode or reduce its lifetime. The laser diode must be operated with a suitable power supply with minimized electrical noise. The laser diode is very sensitive to electrostatic discharge (ESD). Proper precautions must be taken.

b) Mounting instructions

In order to maintain the lifetime of the laser diode proper heat management is essential. Due to the design of the laser diode heat is dissipated only through the base plate of the diode‘s body. A proper heat conducting interconnection between the diodes base plate and the heat sink must be maintained.

Handling:

Solvents, water, liquids, non-conductive plastics and glues are not allowed near the device, because solvents and other liquids could emerge and damage the product.

Attention please:

OSRAM OS is not liable for any damage or contamination caused to the laser diode while operating, processing, storing or handling in other atmosphere than pure air. This includes organic materials in the atmosphere (e.g. oil, grease, silicone-based material), causticity gases, alkaline gases, acid gases or any other related atmosphere. Operation or storage in atmosphere with humidity, dewfall or temperatures outside the maximum ratings shall be avoided. Furthermore it has to be ensured that any particles or dust during storage, handling, assembly or operation are not contaminating the laser diode. The product shall be stored, processed and handled in clean rooms only and it shall be avoided to touch it with bare hands.

For further application related information please visit www.osram-os.com/appnotes

DRAFT – For reference only. Subject to change without notice.

Disclaimer

AMS OSRAM assumes no liability whatsoever for any use of this document or its content by recipient including, but not limited to, for any design in activities based on this preliminary draft version. AMS OSRAM may e.g. decide at its sole discretion to stop developing and/or finalizing the underlying design at any time.

Attention please!

The information describes the type of component and shall not be considered as assured characteristics. Terms of delivery and rights to change design reserved. Due to technical requirements components may contain dangerous substances.
For information on the types in question please contact our Sales Organization.
If printed or downloaded, please find the latest version on our website.

Packing

Please use the recycling operators known to you. We can also help you – get in touch with your nearest sales office. By agreement we will take packing material back, if it is sorted. You must bear the costs of transport. For packing material that is returned to us unsorted or which we are not obliged to accept, we shall have to invoice you for any costs incurred.

Product and functional safety devices/applications or medical devices/applications

Our components are not developed, constructed or tested for the application as safety relevant component or for the application in medical devices.
Our products are not qualified at module and system level for such application.

In case buyer – or customer supplied by buyer – considers using our components in product safety devices/ applications or medical devices/applications, buyer and/or customer has to inform our local sales partner immediately and we and buyer and /or customer will analyze and coordinate the customer-specific request between us and buyer and/or customer.

DRAFT – For reference only. Subject to change without notice.

Glossary

1) **Brightness:** The brightness values are measured with a tolerance of ±11%.

2) **Reverse Operation:** This product is intended to be operated applying a forward current within the specified range. Applying any continuous reverse bias or forward bias below the voltage range of light emission shall be avoided because it may cause migration which can change the electro-optical characteristics or damage the LED.

3) **Operating/Forward current:** IF is measured with an internal reproducibility of ±7 % (acc. to GUM with a coverage factor of k = 3).

4) **Wavelength:** λpeak is measured with an internal reproducibility of ±0.3 nm (acc. to GUM with a coverage factor of k = 3).

5) **Operating/Forward voltage:** VF is measured with an internal reproducibility of ±0.05 V (acc. to GUM with a coverage factor of k = 3).

6) **Forward Voltage:** The forward voltages are measured with a tolerance of ±0.1 V.

7) **Tolerance of Measure:** Unless otherwise noted in drawing, tolerances are specified with ±0.1 and dimensions are specified in mm.

DRAFT – For reference only. Subject to change without notice.

Revision History

Version	Date	Change
α.0	2022-07-13	Initial Version

DRAFT – For reference only. Subject to change without notice.

DRAFT – For reference only. Subject to change without notice.

EU RoHS and China RoHS compliant product
此产品符合欧盟 RoHS 指令的要求；
按照中国的相关法规和标准，
不含有毒有害物质或元素。

Published by ams-OSRAM AG
Tobelbader Strasse 30, 8141 Premstaetten, Austria
Phone +43 3136 500-0
ams-osram.com
© All rights reserved