DS1232LPN-HX Low Power MicroMonitor Chip

Description

The DS1232LPN-HX low-power MicroMonitor chip supervises three critical operating conditions for microprocessors: supply voltage integrity, program execution status, and external manual override.

First, an internal precision temperature-compensated reference paired with a comparator circuit continuously monitors the VCC supply rail. Should VCC drift outside the acceptable tolerance range, an internal power-fail flag is asserted, pulling the reset signal active. Once VCC recovers to its valid operating range, the reset output remains active for a minimum duration of 250 ms, granting sufficient time for the power supply and microprocessor to stabilize fully.

A second key feature of the DS1232LPN-HX is manual pushbutton reset management. The device incorporates hardware debouncing for the pushbutton input and ensures a minimum 250 ms active reset pulse upon trigger.

Its third core capability is a built-in watchdog timer. The chip integrates an internal countdown timer; if the strobe input is not pulled low before the timer elapses, the watchdog triggers and asserts the reset signal. Three configurable watchdog timeout intervals are available: roughly 150 ms, 600 ms, and 1.2 seconds.

Features

- ★ 50 μA quiescent current
- ★ Super-low power version of DS1232
- ★ Monitors pushbutton for external override
- ★ Halts and restarts an out-of-control microprocessor
- ★ Automatically restarts microprocessor after power failure
- ★ Industrial temperature -40°C to +85°C available, designated N
- ★ Accurate 5% or 10% microprocessor power supply monitoring
- ★ Provide DIP-8 packaging

PIN ASSIGNMENT

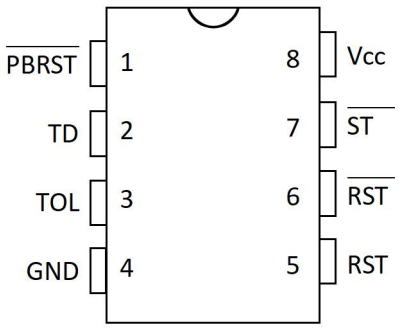

PIN DESCRIPTION

$\overline{PBRST}$	Pushbutton Reset Input
TD	Time Delay Set
TOL	Selects 5% or 10% V_{CC} Detect
GND	Ground
RST	Reset Output (Active High)
$\overline{RST}$	Reset Output (Active Low, open drain)
$\overline{ST}$	Strobe Input
VCC	+5 Volt Power

OPERATION - POWER MONITOR

The DS1232LPN-HX detects out-of-tolerance power supply conditions and warns a processor-based system of impending power failure. When V_{CC} falls below a preset level as defined by TOL, the V_{CC} comparator outputs the signals RST and $\overline{RST}$. When TOL is connected to ground, the RST and $\overline{RST}$ signals become active as V_{CC} falls below 4.75 volts. When TOL is connected to V_{CC}, the RST and RST signals become active as V_{CC} falls below 4.5 volts. The RST and $\overline{RST}$ are excellent control signals for a microprocessor, as processing is stopped at the last possible moments of valid V_{CC}. On power-up, RST and RST are kept active for a minimum of 250 ms to allow the power supply and processor to stabilize.

OPERATION - PUSHBUTTON RESET

The DS1232LPN-HX provides an input pin for direct connection to a pushbutton (Figure 1). The pushbutton reset input requires an active low signal. Internally, this input is debounced and timed such that RST and $\overline{RST}$ signals of at least 250 ms minimum are generated. The 250 ms delay starts as the pushbutton reset input is released from low level.

OPERATION - WATCHDOG TIMER

The watchdog timer function forces RST and $\overline{RST}$ signals to the active state when the $\overline{ST}$ input is not stimulated for a predetermined time period. The time period is set by the TD input to be typically 150 ms with TD connected to ground, 600 ms with TD left unconnected, and 1.2 seconds with TD connected to V_{CC}. The watchdog timer starts timing out from the set time period as soon as RST and $\overline{RST}$ are inactive. If a high-to-low transition occurs on the $\overline{ST}$ input pin prior to timeout, the watchdog timer is reset and begins to timeout again. If the watchdog timer is allowed to timeout, then the RST and $\overline{RST}$ signals are driven to the active state for 250 ms minimum. The $\overline{ST}$ input can be derived from microprocessor address signals, data signals, and/or control signals. When the microprocessor is functioning normally, these signals would, as a matter of routine, cause the watchdog to be reset prior to timeout. To guarantee that the watchdog timer does not timeout, a high-to-low transition must occur at or less than the minimum shown in Table 1. A typical circuit example is shown in Figure 2.

MICROMONITOR BLOCK DIAGRAM

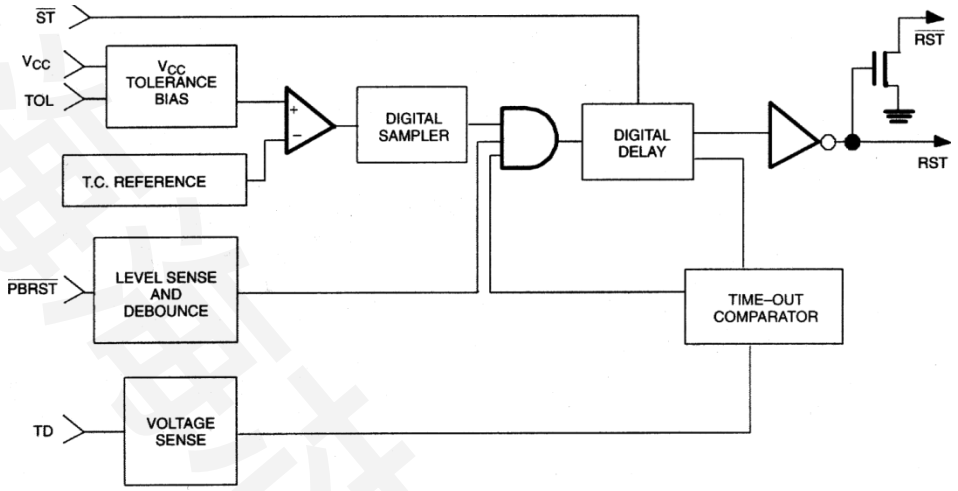

PUSHBUTTON RESET

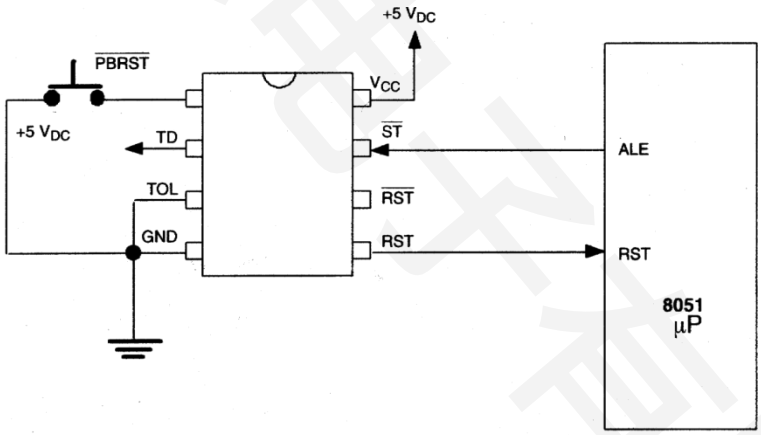

Figure 1

WATCHDOG TIMER

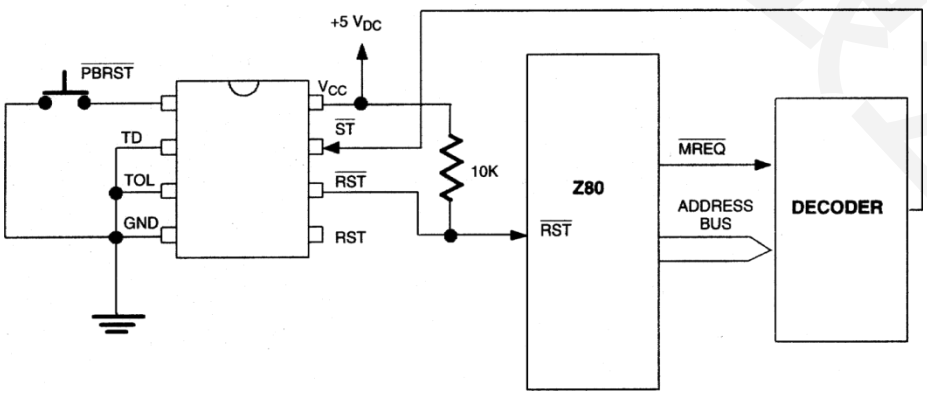

Figure 2

TIMING DIAGRAM: PUSHBUTTON RESET

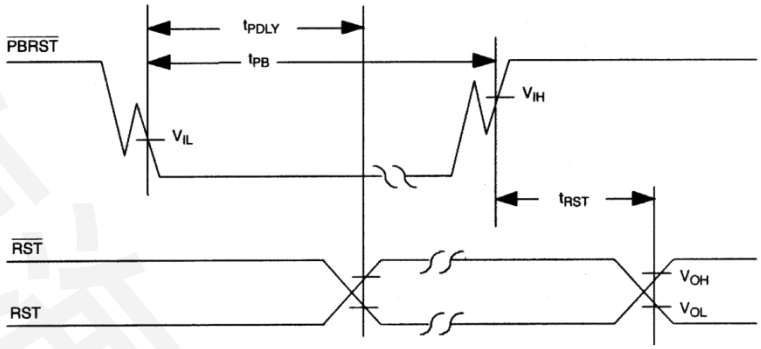

Figure 3

TIMING DIAGRAM: STROBE INPUT

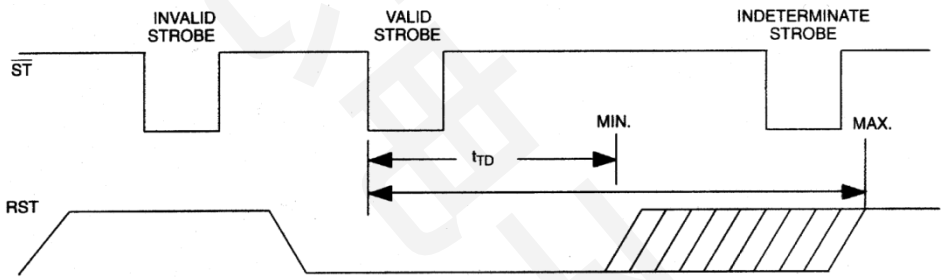

Figure 4

WATCHDOG TIME-OUTS

Table 1

TD	TIME-OUT		
	MIN	TYP	MAX
GND	62.5 ms	150 ms	250 ms
Float	250 ms	600 ms	1000 ms
V_{CC}	500 ms	1200 ms	2000 ms

TIMING DIAGRAM: POWER-DOWN

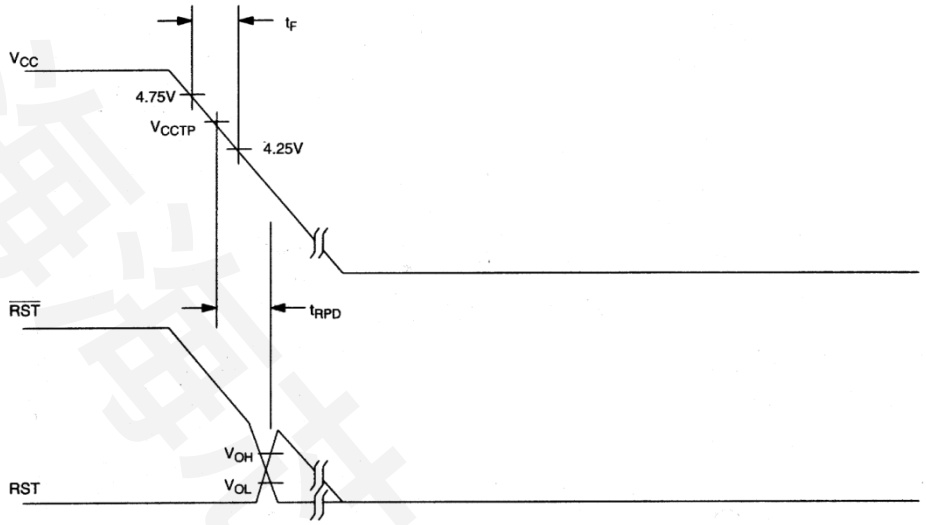

Figure 5

TIMING DIAGRAM: POWER-UP

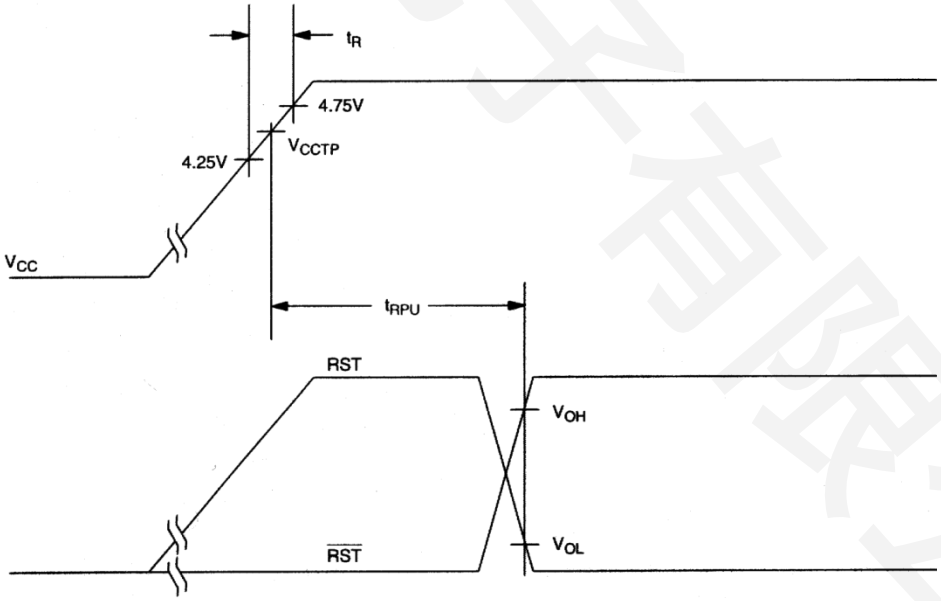

Figure 6

ABSOLUTE MAXIMUM RATINGS*

Voltage on V_{CC} Pin Relative to Ground	-0.5V to +7.0V
Voltage on I/O Relative to Ground	-0.5V to V_{CC} + 0.5V
Operating Temperature	0°C to 70°C
Operating Temperature (Industrial Version)	-40°C to +85°C
Storage Temperature	-55°C to +125°C
Soldering Temperature	260°C for 10 seconds

* This is a stress rating only and functional operation of the device at these or any other conditions above those indicated in the operation sections of this specification is not implied. Exposure to absolute maximum rating conditions for extended periods of time may affect reliability.

RECOMMENDED DC OPERATING CONDITIONS (0°C to 70°C)

PARAMETER	SYMBOL	MIN	TYP	MAX	UNITS	NOTES
Supply Voltage	V_{CC}	4.5	5.0	5.5	V	1
$\overline{ST}$ and $\overline{PBRST}$ Input High Level	V_{IH}	2.0		V_{CC}+0.3	V	1
$\overline{ST}$ and $\overline{PBRST}$ Input Low Level	V_{IL}	-0.3		+0.8	V	1

DC ELECTRICAL CHARACTERISTICS (0°C to 70°C; V_{CC}=4.5 to 5.5V)

PARAMETER	SYMBOL	MIN	TYP	MAX	UNITS	NOTES
Input Leakage	I_{IL}	-1.0		+1.0	µA	3
Output Current @ 2.4V	I_{OH}	-8	-10		mA	5
Output Current @ 0.4V	I_{OL}	10			mA	
Low Level @ RST	V_{OL}			0.4	V	1
Output Voltage @ -500 uA	V_{OH}	V_{CC} -0.5V	V_{CC} -0.1V		V	1, 7
Output Current (CMOS)	I_{CC1}			50	µA	2
Operating Current (TTL)	I_{CC2}		200	500	µA	8
V_{CC} Trip Point (TOL=GND)	V_{CCTP}	4.50	4.62	4.74	V	1
V_{CC} Trip Point (TOL=Vcc)	V_{CCTP}	4.25	4.37	4.49	V	1

CAPACITANCE (t_A=25°C)

PARAMETER	SYMBOL	MIN	TYP	MAX	UNITS	NOTES
Input Capacitance	C_{IN}			5	pF	
Output Capacitance	C_{OUT}			7	pF	

AC ELECTRICAL CHARACTERISTICS (0°C to 70°C; Vcc=5V ± 10%)

PARAMETER	SYMBOL	MIN	TYP	MAX	UNITS	NOTES
$\overline{PBRST}$ = V_{IL}	t_{PB}	20			ms	
RESET Active Time	t_{RST}	250	610	1000	ms	
$\overline{ST}$ Pulse Width	t_{ST}	20			ns	6, 9
V_{CC} Fail Detect to RST and $\overline{RST}$	t_{RPD}		50	175	µs	
V_{CC} Slew Rate 4.75V to 4.25V	t_F	300			µs	
V_{CC} Detect to RST and $\overline{RST}$ Inactive	t_{RPU}	250	610	1000	ms	4
V_{CC} Slew Rate 4.25V to 4.75V	t_R	0			ns	
$\overline{PBRST}$ Stable Low to $\overline{RST}$ and RST	t_{PDLY}			20	ms	

NOTES:

1. All voltages referenced to ground.
2. Measured with outputs open and $\overline{ST}$ and $\overline{PBRST}$ within 0.5V of supply rails.
3. $\overline{PBRST}$ is internally pulled up to V_{CC} with an internal impedance of 40k typical.
4. t_R = 5 µs.
5. $\overline{RST}$ is an open-drain output.
6. Must not exceed t_{TD} minimum. See Table 1.
7. RST remains within 0.5V of V_{CC} on power-down until V_{CC} drops below 2.0V. $\overline{RST}$ remains within 0.5V of GND on power-down until V_{CC} drops below 2.0V.
8. Measured with outputs open and $\overline{ST}$ and $\overline{PBRST}$ at TTL levels.
9. Watchdog can not be disabled. It must be strobed to avoid resets.

Package Information

DIP-8 (Package Outline Dimensions)

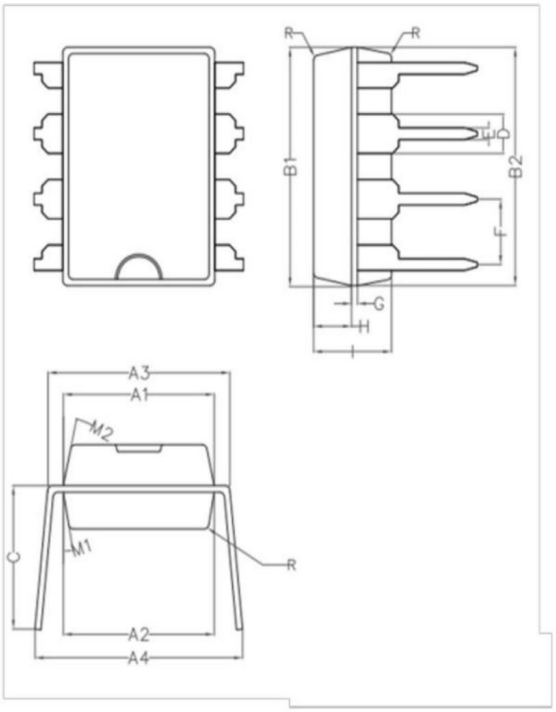

Symbol	Min	Non	Max
A1	6.28	6.33	6.38
A2	6.33	6.38	6.43
A3	7.52	7.62	7.72
A4	7.80	8.40	9.00
B1	9.15	9.20	9.25
B2	9.20	9.25	9.30
C		5.57	
D		1.52	
E	0.43	0.45	0.47
F		2.54	
G		0.25	
H	1.54	1.59	1.64
I	3.22	3.27	3.32
R		0.20	
M1	9°	10°	11°
M2	11°	12°	13°