GT0101
1-Bit Bidirectional Voltage-Level Translator

1 Features	2 Application
- No direction-control **- Data rates** **24 Mbps (Push Pull)** **2 Mbps (Open Drain)** **- 1.65 V to 3.6 V on A port and 2.3 V to 5.5 V on B port ($V_{CCA} \leq V_{CCB}$)** **- V_{CC} isolation feature: if either V_{CC} input is at GND, both ports are in the high-impedance state** **- No power-supply sequencing required: either V_{CCA} or V_{CCB} can be ramped first** **- I_{off} supports partial-power-down mode operation** **- Operating temperature range:-40℃ to +85℃**	**- I2C/SMBus** **- UART** **- GPIO**

3 Description	Circuit Diagram
This one-bit non-inverting translator which is a bidirectional voltage-level translator and can be used to build digital switching compatibility between multi voltage systems. This IC uses two separate configurable power supply tracks that including A port supporting operating voltages from 1.65 V to 3.6 V with tracking V_{CCA} supply, and also including B port supporting operating voltages from 2.3 V to 5.5 V with tracking V_{CCB} supply. The advantage above provides the support of both lower and higher logic signal levels while providing bidirectional translation capabilities between any of the 1.8-V, 2.5-V, 3.3-V, and 5- V voltage circuit points. Placing output-enable (OE) input to low level, all I/Os are forced to high-impedance state that significantly lower the quiescent current consumption. In order to ensure the high-impedance state during power up or power down, OE pin should be tied to GND via a pulldown resistor; the minimum value of the resistor is determined by the current-sourcing capability of the driver.	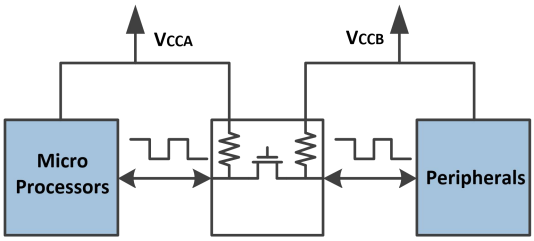

4 Revision History

Revision	Date	Note
Rev. A1. 0	2023. 09. 21	Original Version
Rev. A1. 1	2023. 09. 09	Additional Switch Characteristics Data
Rev. A1. 2	2023. 10. 24	1.Updated Package Qty 2.Added Tape and Reel Information
Rev. A1. 3	2023. 12. 18	Updated New Package
Rev. A1. 4	2024. 01. 26	Updated Part Name
Rev. A1. 5	2024. 08. 22	1.Updated ESD 2.Updated Electrical Specifications(7.3/7.4/7.5)

The latest datasheet version should be checked on the GTIC official website, as the company does not actively inform customers about updates to the datasheet

5 Device Summary, Pin and Packages

Table 5-1. Device Summary(1)

Serial Name	Part Name	Package	Body Size (Nom)	Marking(2)	*MSL(3)*	*Package Qty*
GT0101	GT0101S6	SOT23-6	2.92mm×2.80mm	0101 XXXXX	3	Tape and Reel,3000
	GT0101C6	SC70-6	2.10mm×1.25mm	0101 XXXXX	3	Tape and Reel,3000
	GT0101D6	DFN1.45×1.0-6L	1.45mm×1.00mm	0101 XXXX	3	Tape and Reel,5000

(1)For all available packages, please contact product sales.

(2)There may be additional marking, which relates to the lot trace code information (data code and Vendor code), the logo or the environmental category on the device.

(3)MSL, The Moisture Sensitivity Level rating according to the JEDEC industry standard classifications.

(4)"XXXXX" in Marking will be appeared as the batch code.

5 Device Summary, Pin and Packages(Continued)

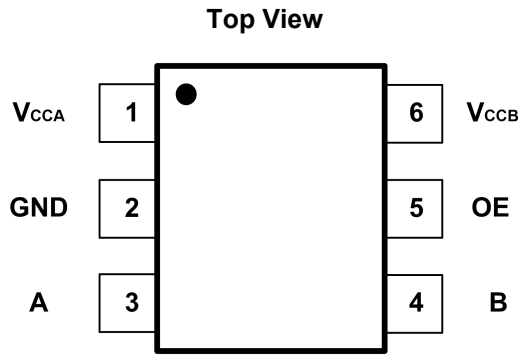

Fig.5-1. GT0101: S6 (SOT23-6) Package
GT0101: C6 (SC70-6) Package

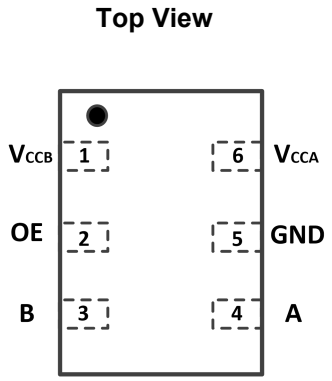

Fig.5-2. GT0101: D6 (DFN1.45×1.0_6L) Package

\Table 5-1 Pin Definition

Pin			I/O	Function
Name	S6/C6	D6		
V_{CCA}	1	6	-	A Port Supply Voltage. 1.65V≤VccA≤5.5V and VccA≤VccB
GND	2	5	-	Ground
A	3	4	I/O	Input/Output A. Referenced to V_{CCA}.
B	4	3	I/O	Input/Output B. Referenced to V_{CCB}.
OE	5	2	I	Output Enable(Active High).Pull OE low to place all outputs in 3-state mode. Referenced to V_{CCA}.
V_{CCB}	6	1	-	B Port Supply Voltage. 2.3V≤VccB≤5.5V

*It is suggested to leave the unconnected pins floating.

6 Voltage, Temperature, ESD and Thermal Ratings

6.1 Absolute Maximum Ratings(1)(2)(3)

Parameters		Min	Max	Unit
Supply voltage, V_{CCA}		-0.3	6.0	V
Supply voltage, V_{CCB}		-0.3	6.0	V
Input voltage range, V_I	A port	-0.3	6.0	V
	B port	-0.3	6.0	
Voltage range applied to any output in the high-impedance or power-off state, Vo	A port	-0.3	6.0	V
	B port	-0.3	6.0	
Voltage range applied to any output in the high or low state, Vo	A port	-0.3	V_{CCA}+0.3	V
	B port	-0.3	V_{CCA}+0.3	
Input clamp current, I_{IK}	V_I＜0		-50	mA
Output clamp current, I_{OK}	V_O＜0		-50	mA
Continuous output current, I_O			±50	mA
Continuous current through V_{CCA}, V_{CCB} or GND			±100	mA
Maximum junction temperature			150	°C
Storage temperature range		-65	150	°C

(1)Stresses above these ratings may cause permanent damage. Exposure to absolute maximum conditions for extended periods may degrade device reliability. These are stress ratings only, and functional operation of the device at these or any other conditions beyond those specified is not implied.

(2)The input and output negative-voltage ratings may be exceeded if the input and output current ratings are observed

(3)The value of V_{CCA} and V_{CCB} are provided in the recommended operating conditions table.

6.2 ESD Ratings

ESD			Value	Unit
V(ESD)	Electrostatic discharge	Human-Body Model (HBM)(1)	±7.5K	V
		Charged-Device Model (CDM)(2)	±2K	V

(1) JEDEC document JEP155 states that 500-V HBM allows safe manufacturing with a standard ESD control process.

(2) JEDEC document JEP157 states that 250-V CDM allows safe manufacturing with a standard ESD control process.

6 Voltage, Temperature, ESD and Thermal Ratings(Continued)

6.3 Recommended Operating Conditions

V_{CCI} is the supply voltage associated with the input port.V_{CCO} is the supply Voltage associated with the output port.

Parameter	Conditions		Min	Typ	Max	Unit
Supply voltage (1)	V_{CCA}		1.65		3.6	V
	V_{CCB}		2.3		5.5	
High-level input voltage(V_{IH})	A-port I/Os	V_{CCA}=1.65 V to 1.95 V V_{CCB}=2.3 V to 5.5 V	V_{CCI}-0.2		V_{CCI}	V
		V_{CCA}=2.3 V to 3.6 V V_{CCB}=2.3 V to 5.5 V	V_{CCI}-0.4		V_{CCI}	
	B-port I/Os	V_{CCA}=1.65 V to 3.6V V_{CCB}=2.3 V to 5.5 V	V_{CCI}-0.4		V_{CCI}	
	OE input	V_{CCA}=1.65 V to 3.6 V V_{CCB}=2.3 V to 5.5 V	V_{CCI}×0.8		5.5	
Low-level input voltage(VIL)(2)	A-port I/Os	V_{CCA}=1.65 V to 1.95 V V_{CCB}=2.3 V to 5.5 V	0		0.15	V
	B-port I/Os	$V_{CCA=}$1.65 V to 3.6 V V_{CCB}=2.3 V to 5.5 V	0		0.15	
OE	OE input	V_{CCA}=1.65 V to 3.6 V V_{CCB}=2.3 V to 5.5 V	0		V_{CCA}×0.25	V
Input transition rise or fall rate(Δt/Δv)	A-port I/Os push-pull driving				10	ns/V
	B-port I/Os push-pull driving				10	
	Control input				10	
TA operating free-air temperature	-		-40		85	°C

(1) V_{CCA} must be less than or eqμal to V_{CCB}.

(2) The maximum V_{IL} value is provided to ensure that a valid V_{OL} is maintained. The V_{OL} value is V_{IL} plus the voltage drop across the pass gate transistor.

7 Electrical Specifications

7.1 Electrical Characteristics

over recommended operating free-air temperature range (unless otherwise noted) (1) (2) (3)

Parameter		Conditions	V_{CCA}	V_{CCB}	Temp	Min	Typ	Max	Unit
V_{OHA}	Port A Output High Voltage	I_{OH}=–20 μA $V_{IB} \geq V_{CCB} - 0.4V$	1.65V to 3.6V	2.3V to 5.5V	Full	V_{CCA}×0.7			V
V_{OLA}	Port A Output Low Voltage	I_{OL}=1mA $V_{IB} \leq 0.15$ V	1.65V to 3.6V	2.3V to 5.5V	Full			0.3	V
V_{OHB}	Port B Output High Voltage	I_{OH}=–20 μA $V_{IA} \geq V_{CCA} - 0.4V$	1.65V to 3.6V	2.3V to 5.5V	Full	V_{CCA}×0.7			V
V_{OLB}	Port B Output Low Voltage	I_{OL}=1mA $V_{IA} \leq 0.15$ V	1.65V to 3.6V	2.3V to 5.5V	Full			0.3	V
I_I	Input Leakage Current	OE	1.65V to 3.6V	2.3V to 5.5V	+25℃			±1	μA
					Full			±1.5	
I_{off}	Partial Power Down Current	A Ports	0V	0V to 5.5V	+25℃			±0.5	μA
					Full			±1	
		B Ports	0V to 3.6V	0V	+25℃			±0.5	
					Full			±1	
I_{OZ}	High-impedance State Output Current	A or B port OE=0V	1.65V to 3.6V	2.3V to 5.5V	+25℃			±0.5	μA
					Full			±1	
I_{CCA}	V_{CCA} Supply Current	V_I=V_O=open I_O=0	1.65V to V_{CCB}	2.3v to 5.5V	Full			2.5	μA
			3.6v	0V	Full			2.5	
			0v	5.5V	Full			-1	
I_{CCB}	V_{CCB} Supply Current	V_I=V_O=open I_O=0	1.65V to V_{CCB}	2.3v to 5.5V	Full			10	μA
			3.6v	0V	Full			-1	
			0v	5.5V	Full			1	
I_{CCA} + I_{CCB}	Combined Supply Current	V_I=V_{CCI} or GND I_O=0	1.65V to V_{CCB}	2.3v to 5.5V	Full			13	μA
I_{CCZA}	V_{CCA} Supply Current	V_I=V_{CCI} or 0V I_O=0, OE=0V	1.65V to V_{CCB}	2.3v to 5.5V	Full			1	μA
I_{CCZB}	V_{CCB} Supply Current	V_I=V_{CCI} or 0V I_O=0, OE=0V	2.3v to 3.6V	2.3v to 5.5V	Full			1	μA
C_i	Input Capacitance	OE	3.3V	3.3V	+25℃		2.5		PF
C_{io}	Input-to-output Internal Capacitance	A Port	3.3V	3.3V	+25℃		5		PF
		B Port	3.3V	3.3V	+25℃		5		

(1) V_{CCI} is the V_{CC} associated with the input port.
(2) V_{CCO} is the V_{CC} associated with the output port
(3) V_{CCA} must be less than or equal to V_{CCB}.

7 Electrical Specifications (Continued)

7.2 Timing Requirements

V_{CCA}=1.8V±0.15V

		V_{CCB}=2.5V±0.2V	V_{CCB}=3.3V±0.2V	V_{CCB}=5V±0.2V	Unit
		Typ	Typ	Typ	
Data Rate	Push-pull Driving	21	22	24	Mbps
	Open-drain Driving	2	2	2	
Pulse Duration(tw)	Push-pull Driving (Data Inputs)	47	45	41	ns
	Open-drain Driving (Data Inputs)	500	500	500	

V_{CCA}=2.5V±0.15V

		V_{CCB}=2.5V±0.2V	V_{CCB}=3.3V±0.2V	V_{CCB}=5V±0.2V	Unit
		Typ	Typ	Typ	
Data Rate	Push-pull Driving	20	22	24	Mbps
	Open-drain Driving	2	2	2	
Pulse Duration(tw)	Push-pull Driving (Data Inputs)	50	45	41	ns
	Open-drain Driving (Data Inputs)	500	500	500	

V_{CCA}=3.3V±0.15V

		V_{CCB}=3.3V±0.2V	V_{CCB}=5V±0.2V	Unit
		Typ	Typ	
Data Rate	Push-pull Driving	23	24	Mbps
	Open-drain Driving	2	2	
Pulse Duration(tw)	Push-pull Driving (Data Inputs)	43	41	ns
	Open-drain Driving (Data Inputs)	500	500	

7 Electrical Specifications (Continued)

7.3 Switching Characteristics: V_{CCA}=1.8V±0.15V

over recommended operating free-air temperature range (unless otherwise noted)

Parameter		Conditions		V_{ccB}=2.5V±0.2V	V_{ccB}=3.3V±0.2V	V_{ccB}=5V±0.2V	Units
				Typ	Typ	Typ	
t_{PHL}	Propagation Delay Time High-to-low Output	A to B	Push-pull Driving	7.5	10	14.6	ns
			Open-drain Driving	30.6	31.2	32.1	
t_{PLH}	Propagation Delay Time low-to-high Output	A to B	Push-pull Driving	8.6	7.2	7.1	ns
			Open-drain Driving	124	140	123	
t_{PHL}	Propagation Delay Time High-to-low Output	B to A	Push-pull Driving	6.3	6.7	7	ns
			Open-drain Driving	20.2	13.5	8.5	
t_{PLH}	Propagation Delay Time low-to-high Output	B to A	Push-pull Driving	5	3.6	2.6	ns
			Open-drain Driving	169	154	133	
t_{en}	Enable Time	OE to A or B		18.4	18	18	ns
t_{dis}	Disable Time	OE to A or B		130	121	127	ns
t_{rA}	Input Rise Time	A port rise time	Push-pull Driving	12.9	8.5	6	ns
			Open-drain Driving	165	133	100	
t_{rB}	Input Rise Time	B port rise time	Push-pull Driving	22.5	22.2	19.7	ns
			Open-drain Driving	167	144	121	
t_{fA}	Input Fall Time	A port fall time	Push-pull Driving	8.4	8.5	15.7	ns
			Open-drain Driving	5.3	5.8	7	
t_{fB}	Input Fall Time	B port fall time	Push-pull Driving	8	9.8	10.7	ns
			Open-drain Driving	3.3	3	2.3	
$t_{SK(O)}$	Skew(time), Output	Channel-to-Channel Skew		0.5	0.5	0.5	ns
Maximum Data Rate		Push-pull Driving		22	23	24	Mbps
		Open-drain Driving		2	2	2	

7 Electrical Specifications (Continued)

7.4 Switching Characteristics, V_{CCA}=2.5V±0.15V

over operating free-air temperature range (unless otherwise noted)

Parameter		Conditions		V_{ccB}=2.5V±0.2V	V_{ccB}=3.3V±0.2V	V_{ccB}=5V±0.2V	Units
				Typ	Typ	Typ	
t_{PHL}	Propagation Delay Time High-to-low Output	A to B	Push-pull Driving	3.6	4	4.8	ns
			Open-drain Driving	14.1	14.7	14.8	
t_{PLH}	Propagation Delay Time low-to-high Output	A to B	Push-pull Driving	1	4.5	4.3	ns
			Open-drain Driving	165	145	133	
t_{PHL}	Propagation Delay Time High-to-low Output	B to A	Push-pull Driving	3.6	3.7	4.5	ns
			Open-drain Driving	16.4	11	7	
t_{PLH}	Propagation Delay Time low-to-high Output	B to A	Push-pull Driving	1.1	1	1	ns
			Open-drain Driving	154	146	131	
t_{en}	Enable Time	OE to A or B		8	8	7.6	ns
t_{dis}	Disable Time	OE to A or B		148	134	130	ns
t_{rA}	Input Rise Time	A port Rise Time	Push-pull Driving	9.2	6.9	5.4	ns
			Open-drain Driving	146	111	57	
t_{rB}	Input Rise Time	B port Rise Time	Push-pull Driving	8.8	7	6.3	ns
			Open-drain Driving	133	121	83	
t_{fA}	Input Fall Time	A port Fall Time	Push-pull Driving	5	4.2	6.3	ns
			Open-drain Driving	2.9	3	3	
t_{fB}	Input Fall Time	B port Fall Time	Push-pull Driving	5.1	4.6	6.4	ns
			Open-drain Driving	2.8	2	1.9	
$t_{SK(O)}$	Skew(time), Output	Channel-to-Channel Skew		0.5	0.5	0.5	ns
Maximum Data Rate		Push-pull Driving		22	24	24	Mbps
		Open-drain Driving		2	2	2	

7 Electrical Specifications (Continued)

7.5 Switching Characteristics, V_{CCA} =3.3V±0.3V

over recommended operating free-air temperature range (unless otherwise noted)

Parameter		Conditions		V_{ccB}=3.3V±0.2V	V_{ccB}=5V±0.2V	Units
				TYP	TYP	
t_{PHL}	Propagation Delay Time High-to-low Output	A to B	Push-pull Driving	2.4	3.6	ns
			Open-drain Driving	8.6	8.8	
t_{PLH}	Propagation Delay Time High-to-low Output	A to B	Push-pull Driving	1	2.6	ns
			Open-drain Driving	141	131	
t_{PHL}	Propagation Delay Time High-to-low Output	B to A	Push-pull Driving	2.6	2.7	ns
			Open-drain Driving	9.6	6.3	
t_{PLH}	Propagation delay time low-to-high Output	B to A	Push-pull Driving	1	1	ns
			Open-drain Driving	141	130	
t_{en}	Enable Time	OE to A or B		5.2	5.2	ns
t_{dis}	Disable Time	OE to A or B		154	155	ns
t_{rA}	Input Rise Time	A port Rise Time	Push-pull Driving	5.7	4.6	ns
			Open-drain Driving	140	93	
t_{rB}	Input Rise Time	B port Rise Time	Push-pull Driving	5.5	5.2	ns
			Open-drain Driving	129	104	
t_{fA}	Input Fall Time	A port Fall Time	Push-pull Driving	4	3.2	ns
			Open-drain Driving	2.4	2.3	
t_{fB}	Input Fall Time	B port Fall Time	Push-pull Driving	3.6	4.5	ns
			Open-drain Driving	2.1	1.7	
$t_{SK(O)}$	Skew(time), Output	Channel-to-Channel Skew		0.5	0.5	ns
Maximum Data Rate		Push-pull Driving		24	24	Mbps
		Open-drain Driving		2	2	

8 Typical Characteristics

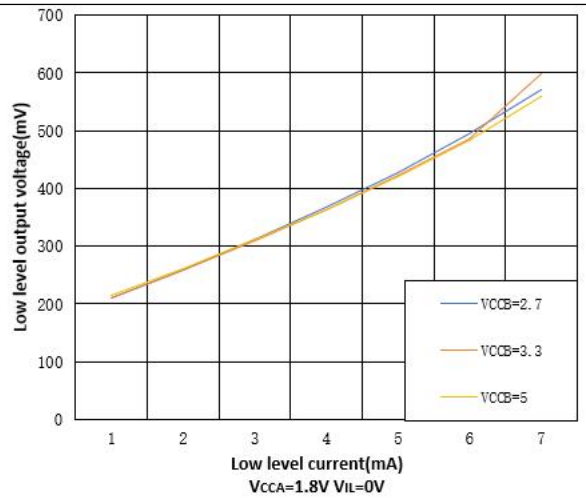

Fig.8-1. Low Level Output Voltage vs Low Level Current

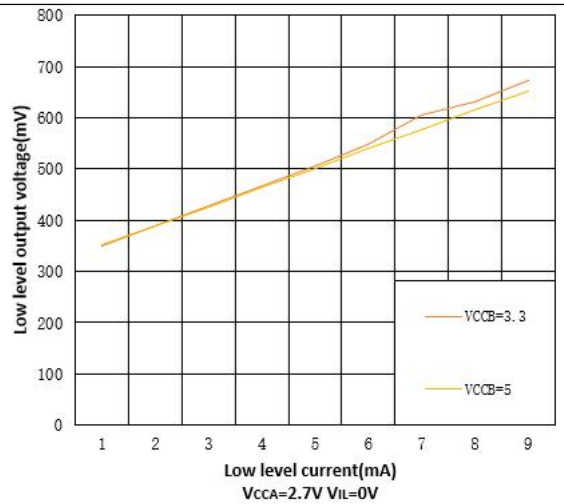

Fig.8-2. Low Level Output Voltage vs Low Level Current

9 Parameter Measurement Information

Unless otherwise noted, all input pulsed are supplied by generators having the following characteristics:

- PSRR 10MHz
- Zo=50 Ω
- dv/dt ≧1V/ns

Note: All input pulses are measured one at a time with one transition per measurement

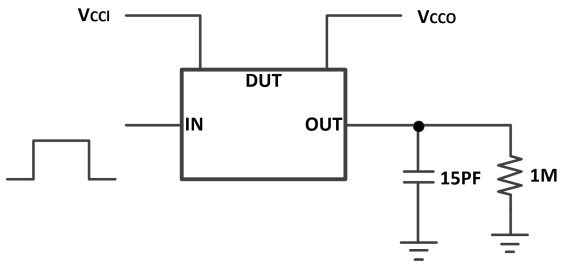

Fig.9-1. Data Rate, Pulse Duration, Propagation Delay, Output Rise and Fall Time Measurement Using a Push-Pull Driver

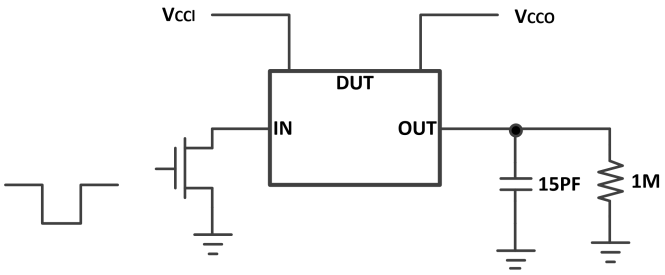

Fig.9-2. Data Rate, Pulse Duration, Propagation Delay, Output Rise and Fall Time Measurement Using an Open-Drain Driver

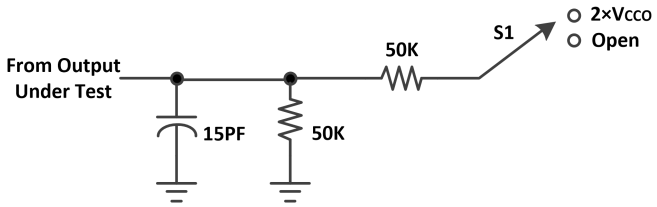

Fig.9-3. Load Circuit for Enable/Disable Time Measurement

Table 9-1 Switch Configuration for Enable/Disable Timing

Test	S1
t_{PZL}(1), t_{PLZ}(2)	2×V_{CCO}
t_{PHZL}(1), t_{PZH}(2)	Open

(1) t_{PZL} and t_{PZH} are the same as ten.

(2) t_{PLZ} and t_{PHZ} are the same as tdis.

9 Parameter Measurement Information (Continued)

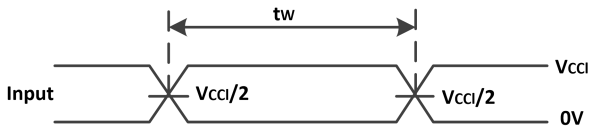

(1) All input pulses are measured one at a time, with one transition per measurement.

Fig.9-4. Voltage Waveforms Pulse Duration

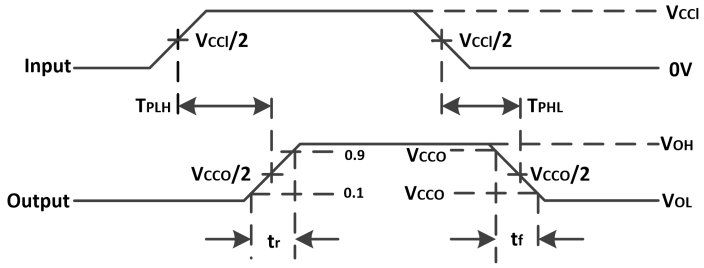

Fig.9-5. Voltage Waveforms Propagation Delay Times

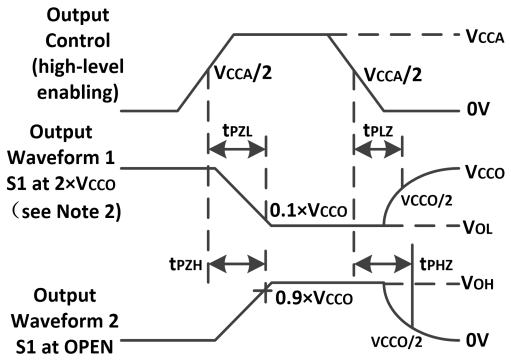

Fig.9-6. Voltage Waveforms Enable and Disable

10 Detailed Description

10.1 Overview

The GT0101 is a one-bit Bi-direction voltage-level translator specifically designed for translating logic voltage levels. The A port can accept I/O voltages that cover from 1.65 V to 3.6 V range; The B port can accept I/O voltages from 2.3 V to 5.5 V. The device is a pass-gate architecture with edge-rate accelerators (one-shots) to improve the overall data rate. 10-kΩ pullup resistors that usually used in open-drain applications have been integrated inside IC with the advantage saving an external resistor. Not only the IC is designed for open-drain applications, but also this device can translate push-pull CMOS logic outputs.

10.2 Architecture

The GT0101 architecture (see Figure below) is a translator with Bi-direction-Sensing function that means a direction-control mechanism to control the direction of data flow from A to B or from B to A is not needed. These two bidirectional channels independently determine the direction of data flow without a direction-control signal. This auto-direction feature is realized by each I/O pin can be automatically reconfigured as either an input or an output.

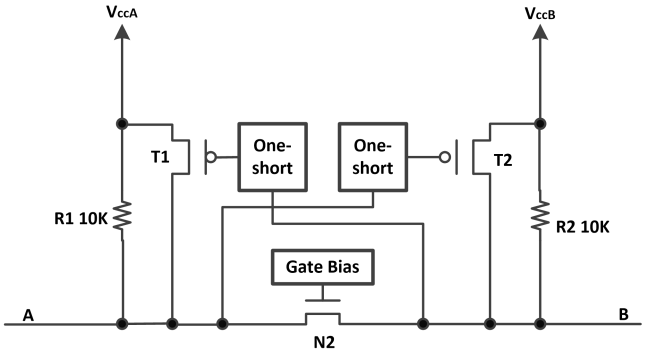

Fig.10-1. Architecture of GT0101

The GT0101 employs two key circuits to enable this voltage translation.

1. An N-Channel pass-gate transistor topology that ties A-port to B-port.
2. Output one-shot edge-rate accelerate circuitry to detect and accelerate rising edges on the A or B ports.

11 Application Information

The GT0101 can be used in level-translation applications in interfacing devices or systems operating at different interface voltages with on another. The GT0101 is ideal for use in applications where an open-drain driver is connected to the data I/Os.

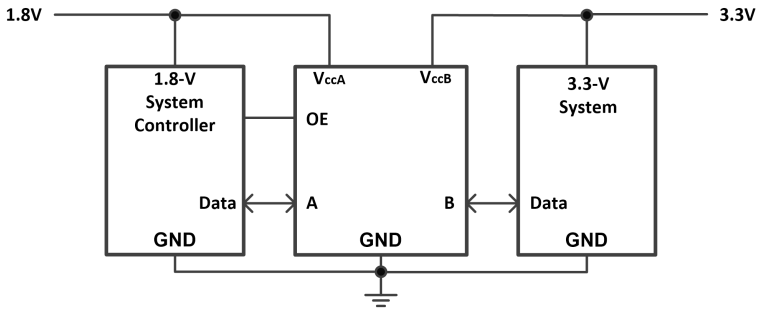

Fig.11-1. Typical Application Schematic

12 Package Outline Dimension

SOT23-6

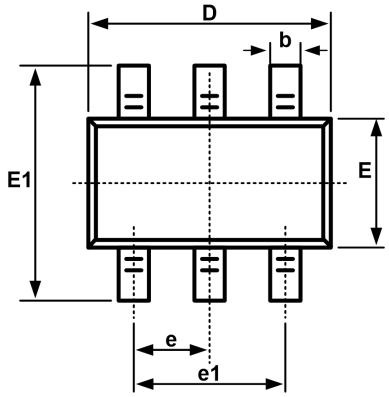

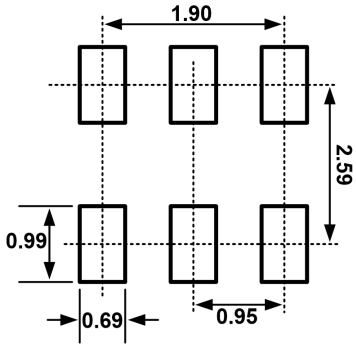

Recommended Land Pattern (Unit: mm)

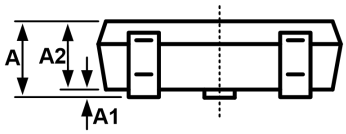

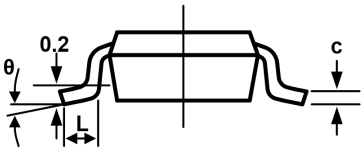

Symbol	Dimensions In Millimeters		Dimensions In Inches	
	Min	Max	Min	Max
A	1.050	1.250	0.041	0.049
A1	0.000	0.100	0.000	0.004
A2	1.050	1.150	0.041	0.045
b	0.300	0.500	0.012	0.020
c	0.100	0.200	0.004	0.008
D	2.820	3.020	0.111	0.119
E	1.500	1.700	0.059	0.067
E1	2.650	2.950	0.104	0.116
e	0.95BSC		0.037BSC	
e1	1.800	2.000	0.071	0.079
L	0.300	0.600	0.012	0.024
θ	0°	8°	0°	8°

12 Package Outline Dimension(Continued)

SC70-6

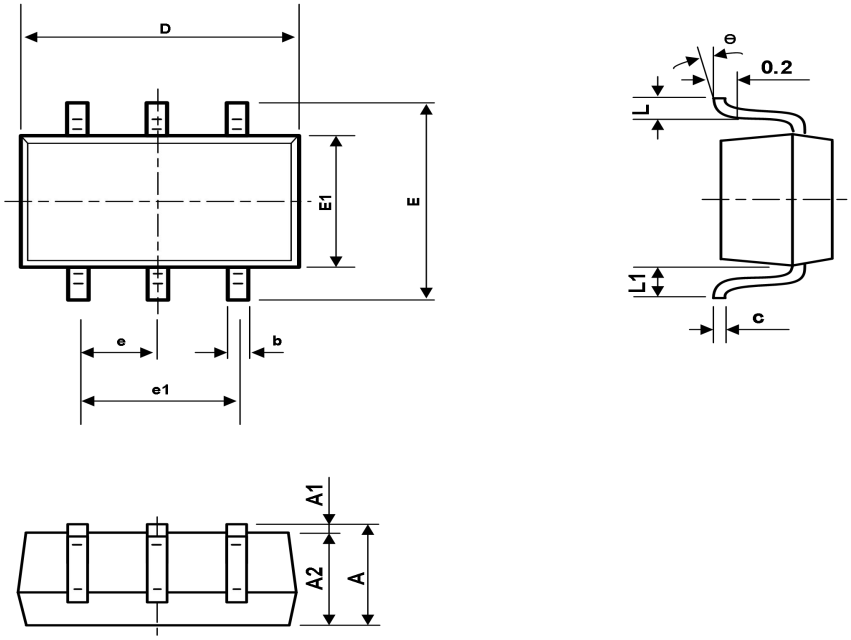

symbol	Dimension In Millimeters		Dimensions In Inches	
	Min	Max	Min	Max
A	0.900	1.100	0.035	0.043
A1	0.000	0.100	0.000	0.004
A2	0.900	1.000	0.035	0.039
b	0.150	0.350	0.006	0.014
c	0.110	0.175	0.004	0.007
D	2.000	2.200	0.079	0.087
E	2.150	2.450	0.085	0.096
E1	1.150	1.350	0.045	0.053
e	0.650TYP		0.026TYP	
e1	1.200	1.400	0.047	0.055
L	0.260	0.460	0.010	0.018
L1	0.525REF		0.021REF	
θ	0°	8°	0°	8°

12 Package Outline Dimension(Continued)

DFN1.4×1-6L

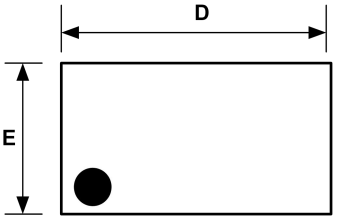

TOP VIEW

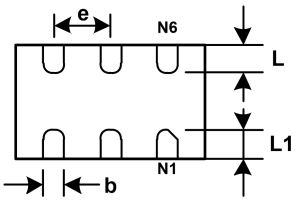

BOTTOM VIEW

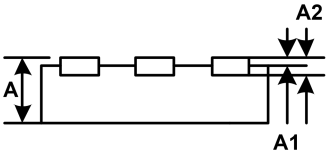

SIDE VIEW

Symbol	Dimensions In Millimeters		Dimensions In Inches	
	Min	Max	Min	Max
A	0.500	0.600	0.020	0.024
A1	0.000	0.050	0.000	0.002
A2	0.150REF		0.006REF	
D	1.400	1.500	0.055	0.059
E	0.950	1.050	0.037	0.041
b	0.180	0.280	0.007	0.011
e	0.500BSC		0.020BSC	
L	0.250	0.450	0.010	0.018
L1	0.300	0.500	0.012	0.020

13 Tape and Reel Information

Reel Dimensions **Reel Dimensions**

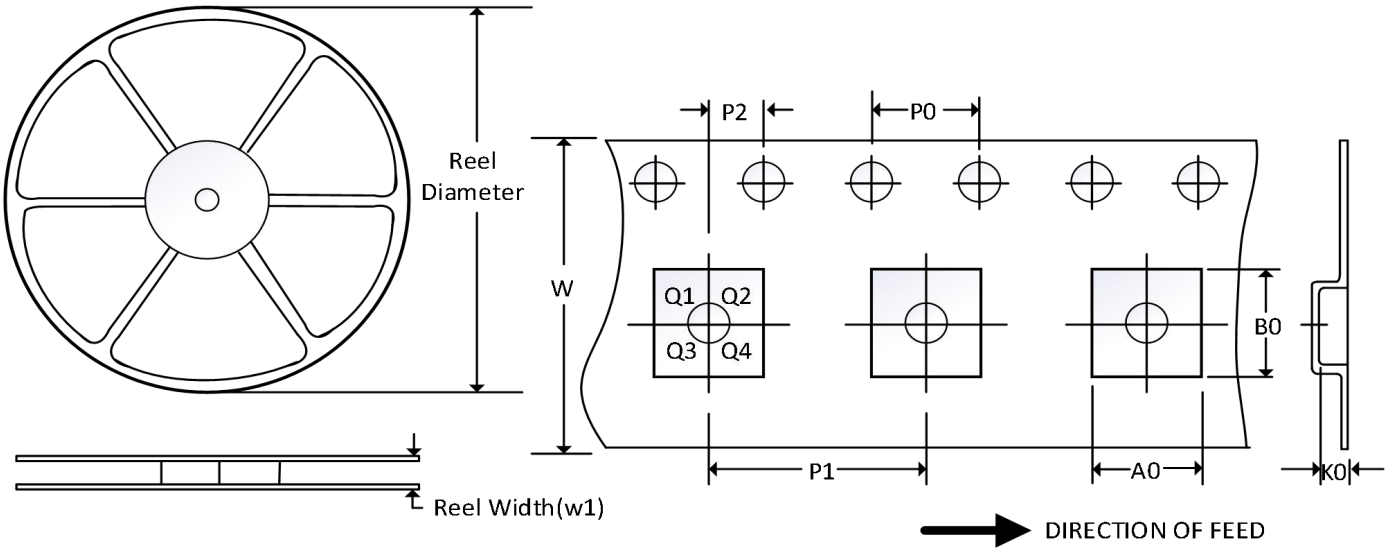

Note: The picture is only for reference. Please make the object as the standard.

Key Parameter List of Tape and Reel

Package Type	Reel Diameter	Reel Width (mm)	A0 (mm)	B0 (mm)	K0 (mm)	P0 (mm)	P1 (mm)	P2 (mm)	W (mm)	Pin1 Quadrant
SOT23-6	7''	9.5	3.17	3.23	1.37	4.0	4.0	2.0	8.0	Q3
SC70-6	7''	9.5	2.40	2.50	1.20	4.0	4.0	2.0	8.0	Q3
DFN1.45×1.0-6L	7''	9.5	1.2	1.65	0.7	4.0	4.0	2.0	8.0	Q1

Note:
(1)All dimensions are nominal.
(2)Plastic or metal protrusions of 0.15mm maximum per side are not included.