*Sep.* 2021

# Datasheet of LTCC Device

## RoHS & Halogen Free & REACH Compliance

# Laminated Ceramic Diplexer

## 2400-2500MHz / 4900-5950MHz

# P/N: FLT18D254959D-3206C

*Contents in this sheet are subject to change without prior notice.

# LTCC Diplexer 1608 (BS 0603) Size,

# For 2400-2500 MHz / 4900-5950 MHz Working Frequency

## 1. Features

High Isolation and Low Insertion Loss.

## 2. Applications

Wi-Fi 2400-2500 MHz and 4900-5950 MHz band separation.

## 3. Shapes & Dimensions

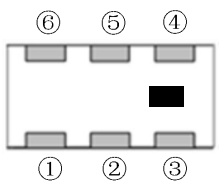

Top view

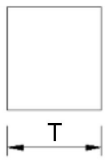


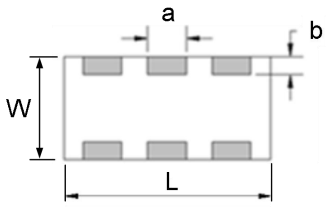

Bottom view

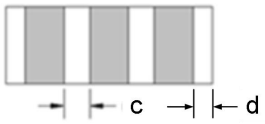

Side view

| Mark | L | W | T | a | b | c | d |
|---|---|---|---|---|---|---|---|
| **Dimensions (mm)** | 1.6±0.1 | 0.8±0.1 | 0.6±0.1 | 0.25±0.1 | 0.15±0.1 | 0.25±0.1 | 0.175±0.1 |

## 4. Terminal Pin Definition

| | | | | | |
|---|---|---|---|---|---|
| ① | **Low band** | ② | **GND** | ③ | **High band** |
| ④ | **GND** | ⑤ | **Common** | ⑥ | **GND** |

## 5. Electrical Characteristics

| FLT18D254959D-3206C | Specification | |
|---|---|---|
| Frequency range | 2400-2500 MHz | 4900-5950 MHz |
| Insertion Loss (@ +25℃) | 0.50 dB max. (0.38 dB typ.) | 0.70 dB max. (0.58 dB typ.) |
| Insertion Loss (@ -40~+85℃) | 0.65 dB max. | 1.1 dB max. |
| Attenuation | 25 dB min. @ 4800-5000 MHz<br>25 dB min. @ 7200-7500 MHz | 27 dB min. @ 1200-1500 MHz<br>27 dB min. @ 1500-2000 MHz<br>20 dB min. @ 2300-2700 MHz<br>7 dB min. @ 3300-3800 MHz<br>15 dB min. @ 9800-11900 MHz |
| Isolation | 30 dB min. @ 2400-2500MHz<br>30 dB min. @ 4900-5950MHz | |
| Return Loss | 10 dB min. | 10 dB min. |
| Impedance | 50 Ω | |
| Power Capacity | 2W max. | |
| MSL | LEVEL 1 | |

| Operating and Storage Condition | Storage Condition before Soldering |
|---|---|
| Operation Temperature Range: -40 ~ +85℃<br>Storage Temperature Range: -40 ~ +85℃ | Storage Temperature Range: +10 ~ +30℃<br>Humidity: 30 to 70% relative humidity |

## 6. Typical Electrical Performance at T= 25±5℃

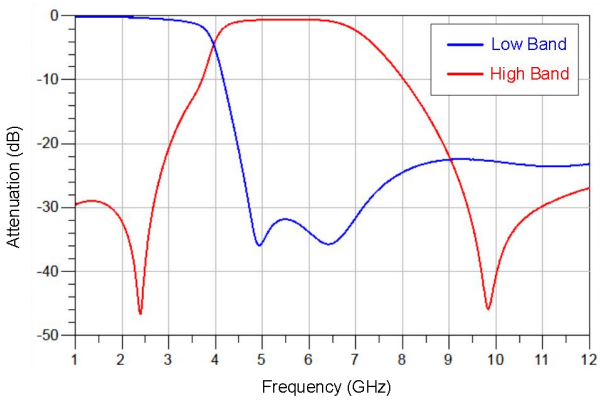


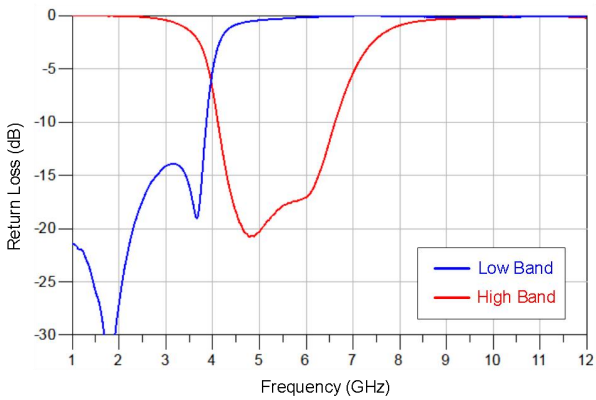

## 7. Soldering Land Pattern

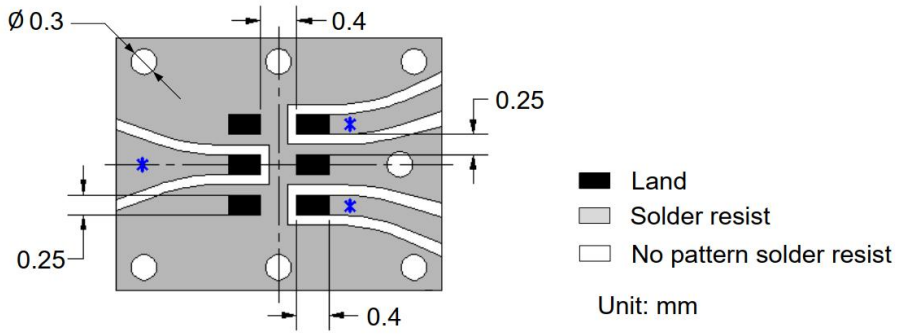


* Line width should be designed to match 50Ω characteristic impedance, depending on PCB material and thickness.

## 8. Reflow Soldering Standard Condition

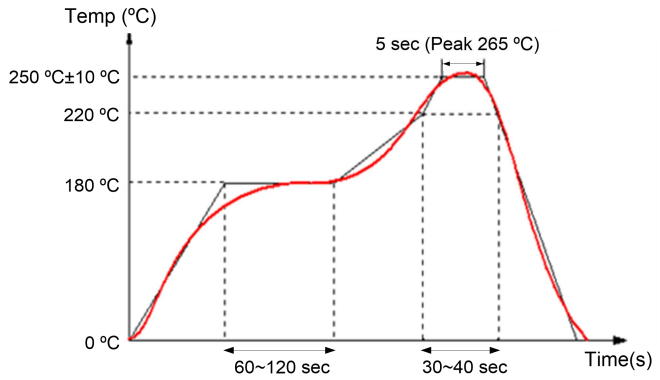


## 9. Packaging and Dimensions 1608 (BS 0603)

◆ **Paper Tape**

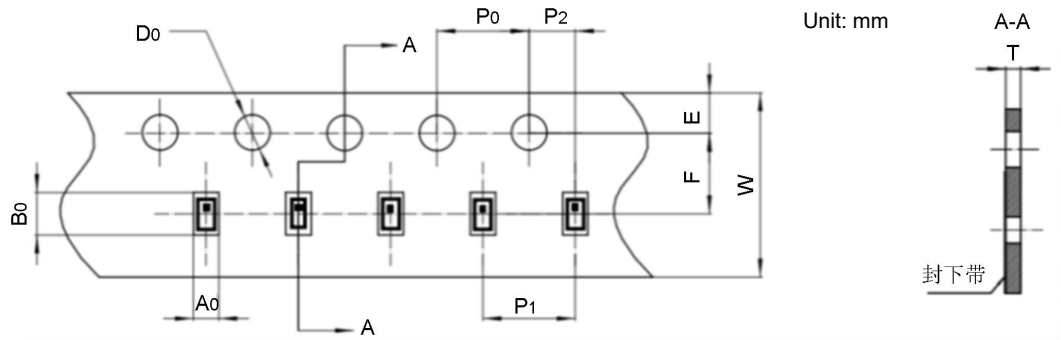


| $A_0$ | $B_0$ | W | F | E | $P_0$ | $P_1$ | $P_2$ | $D_0$ | T | 10 $P_0$ |
|---|---|---|---|---|---|---|---|---|---|---|
| 1.05 ±0.05 | 1.80 ±0.05 | 8.00 ±0.10 | 3.50 ±0.05 | 1.75 ±0.10 | 4.00 ±0.10 | 4.00 ±0.10 | 2.00 ±0.05 | 1.55 ±0.05 | 0.75 ±0.05 | 40.00 ±0.10 |

◆ **Ordering Code**

| F | LT | 18 | D | 254959 | D | 3206C |
|---|---|---|---|---|---|---|
| FTR device | LTCC Technology | Size: 1608 | Diplexer | Working Frequency: 2400-2500 MHz/ 4900-5950 MHz | Terminal electrode | Design code |

◆ **Remarks for Package**

Reserve a length of ⩾150mm for the trailer of the carrier and ⩾150mm for the leader of the carrier and further ⩾150mm of cover tape at the leading part of the carrier.

◆ **Reel (5000 pcs/Reel)**

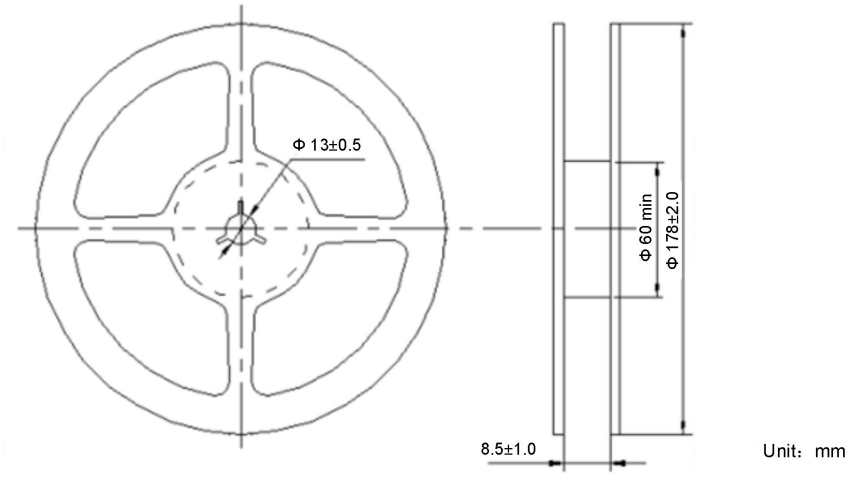


◆ **Storage Period**

Product should be used within 12 months from the day of FTR outgoing inspection.

Storage Temperature Range : +10~+30 degree C, Humidity : 30~70% RH

## 10. Reliability Test

| Test item | Test condition / Test method | Specification |
|---|---|---|
| Solderability<br>IEC 60068-2-58<br>GB/T2423.28 | *Solder bath temperature：240±5℃<br>*Immersion time：2±0.5 sec<br>Solder：Sn96.5Ag3.0Cu0.5 for lead-free. | At least 95% of a surface of each terminal electrode must be covered by fresh solder. |
| Leaching (Resistance to dissolution of metallization)<br>JIS C5101 | *Solder bath temperature：260±5℃<br>*Leaching immersion time：10±1 sec<br>Solder : Sn96.5 Ag3.0 Cu0.5 for lead-free. | Loss of metallization on the edges of each electrode shall not exceed 25%. |
| Resistance to soldering heat<br>IEC 60068-2-58<br>GB/T2423.28 | *Preheating temperature：120~150℃, 1 minute.<br>*Solder temperature：260±5℃<br>*Immersion time：10±1 sec<br>Solder：Sn96.5Ag3.0Cu0.5 for lead-free<br>Measurement to be made after keeping at room temperature for 24±2 hrs. | No mechanical damage.<br>Electrical specification shall satisfy the descriptions in electrical characteristics at the room temperature.<br>Loss of metallization on the edges of each electrode shall not exceed 25%. |
| Drop Test<br>IEC 60068-2-32<br>GB/T2423.8<br>Customer's specification. | *Height：50 cm<br>*Test Surface: Rigid surface of concrete or steel.<br>*Times：6 surfaces for each units；2 times for each side. | No mechanical damage.<br>Electrical specification shall satisfy the descriptions in electrical characteristics at the room temperature. |
| Vibration<br>IEC 60068-2-6<br>GB/T 2423.10 | *Frequency：10Hz~55Hz~10Hz(1min)<br>*Total amplitude：1.5mm<br>*Test times：6hrs.(Two hrs each in three mutually perpendicular directions) | No mechanical damage.<br>Electrical specification shall satisfy the descriptions in electrical characteristics at the room temperature. |
| Adhesive Strength of Termination<br>IEC60068-2-21<br>GB/T 2423.60 | *Pressurizing force：<br>LGA terminal series :<br>3N(1005)；5N(≥1608)<br>DIP terminal series :<br>3N(1005)；5N(1608); 10N(≥2012)<br>*Test time:10±1 sec | No remarkable damage or removal of the termination. |

| | | |
|---|---|---|
| Bending test<br>IEC 60068-2-21<br>GB/T 2423.60 | The middle part of substrate shall be pressurized by means of the pressurizing rod at a rate of about 1 mm/s per second until the deflection becomes 2mm and then pressure shall be maintained for 10±1 sec. Measurement to be made after keeping at room temperature for 24±2 hours. | No mechanical damage.<br>Electrical specification shall satisfy the descriptions in electrical characteristics at the room temperature. |
| Temperature cycle<br>IEC60068-2-14<br>GB/T 2423.22 | 30 minutes at-40℃±2℃.<br>10~15 minutes at room temperature.<br>30minutes at +85℃±2℃.<br>10~15 minutes at room temperature.<br>Total 100 continuous cycles Measurement to be made after keeping at room temperature for 24±2 hrs. | No mechanical damage.<br>Electrical specification shall satisfy the descriptions in electrical characteristics at the room temperature. |
| High temperature<br>IEC 60068-2-2<br>GB/T2423.2 | *Temperature：85±2℃.<br>*Test duration：500+24/-0 hours.<br>Measurement to be made after keeping at room temperature for 24±2 hrs. | No mechanical damage.<br>Electrical specification shall satisfy the descriptions in electrical characteristics. |
| Humidity (steady conditions)<br>IEC60068-2-3<br>GB/T 2423.3 | *Humidity：85±5%R.H.<br>*Temperature：85±2℃.<br>*Time：500+24/-0 hrs.<br>Measurement to be made after keeping at room temperature for 24±2 hrs<br>※ 200hrs measuring the first data then 300hrs data. | No mechanical damage.<br>Electrical specification shall satisfy the descriptions in electrical characteristics at the room temperature. |
| Low temperature<br>IEC 60068-2-1<br>GB/T2423.1 | *Temperature：-40±2℃.<br>*Test duration：500+24/-0 hours<br>Measurement to be made after keeping at room temperature for 24±2 hrs. | No mechanical damage.<br>Electrical specification shall satisfy the descriptions in electrical characteristics at the room temperature. |