Oct. 2023

Datasheet of LTCC Device

RoHS & Halogen Free & REACH Compliance

Laminated Ceramic Diplexer

2400-2500MHz / 4900-5950MHz

P/N: FLT18D24254959D-7299C

*Contents in this sheet are subject to change without prior notice.

LTCC Diplexer 1608 (BS 0603) Size,

For 2400-2500 MHz / 4900-5950 MHz Working Frequency

1. Features

High Isolation and Low Insertion Loss.

2. Applications

Wi-Fi 2400-2500 MHz and 4900-5950 MHz band separation.

3. Shapes & Dimensions

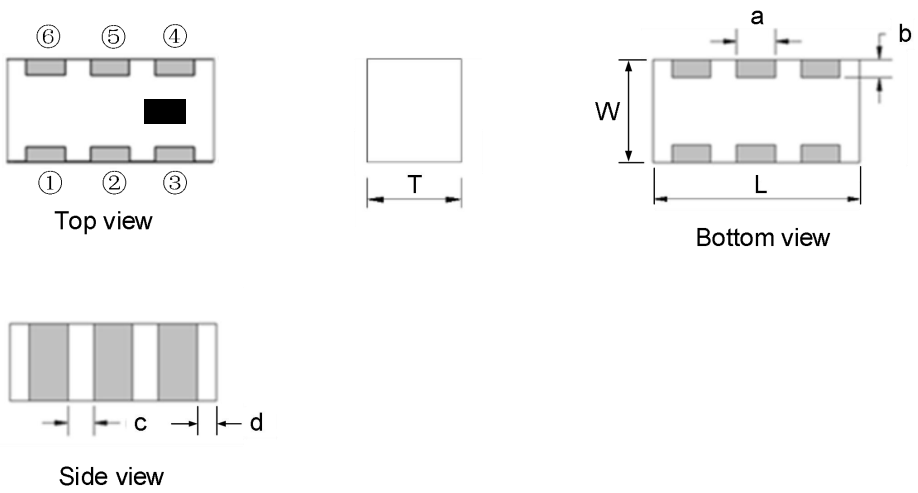

Mark	L	W	T	a	b	c	d
Dimensions (mm)	1.6±0.1	0.8±0.1	0.6±0.1	0.25±0.1	0.15±0.1	0.25±0.1	0.175±0.1

4. Terminal Pin Definition

①	**Low band**	②	**GND**	③	**High band**
④	**GND**	⑤	**Common**	⑥	**GND**

5. Electrical Characteristics

FLT18D24254959D-7299C	Specification	
Frequency range	2400-2500 MHz	4900-5950 MHz
Insertion Loss (@ +25℃)	0.50 dB max. (0.42 dB typ.)	0.60 dB max. (0.52 dB typ.)
Insertion Loss (@ -40~+85℃)	0.75 dB max.	0.85 dB max.
Attenuation	38 dB min. (42 dB typ.) @ 4800-5000 MHz 40 dB min.(43 dB typ.) @ 5000-5950 MHz 40 dB min. (43 dB typ.) @ 7200-7500 MHz	26 dB min. (29 dB typ.) @ 824-2170 MHz 30 dB min. (37 dB typ.) @ 2400-2500 MHz 25 dB min. (27 dB typ.) @ 9800-11900 MHz 20 dB min. (28 dB typ.) @ 15450-17550 MHz
Isolation	33 dB min. (42 dB typ.) @ 2400-2500MHz 38 dB min. (45 dB typ.) @ 4900-5950MHz	
Return Loss	10 dB min.	10 dB min.
Impedance	50 Ω	
Power Capacity	4W max.	
MSL	LEVEL 1	

Operating and Storage Condition	Storage Condition before Soldering
Operation Temperature Range: -40 ~ +85℃ Storage Temperature Range: -40 ~ +85℃	Storage Temperature Range: +10 ~ +30℃ Humidity: 30 to 70% relative humidity

6. Typical Electrical Performance at T= 25±5°C

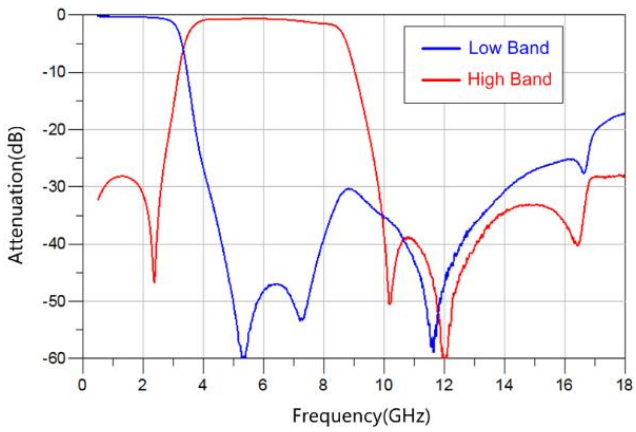

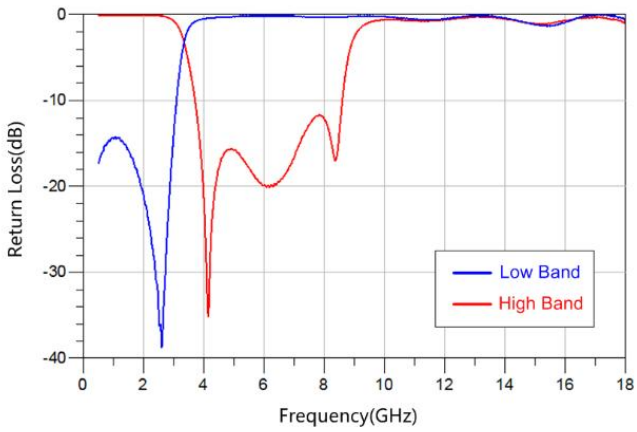

7. Soldering Land Pattern

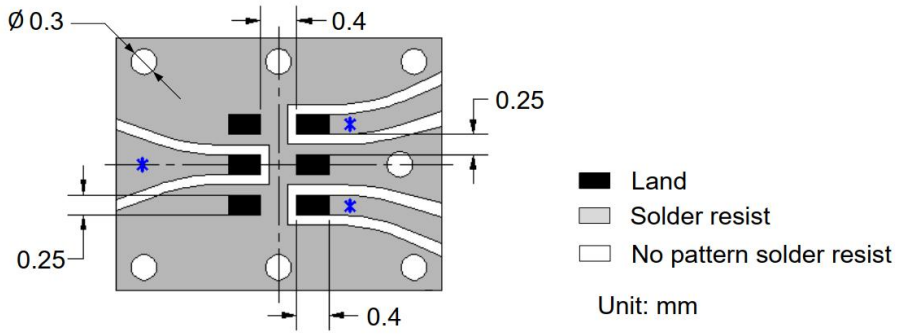

* Line width should be designed to match 50Ω characteristic impedance, depending on PCB material and thickness.

8. Reflow Soldering Standard Condition

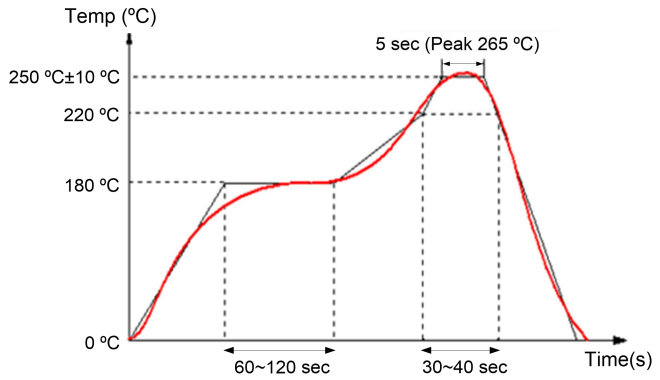

9. Packaging and Dimensions 1608 (BS 0603)

◆ **Paper Tape**

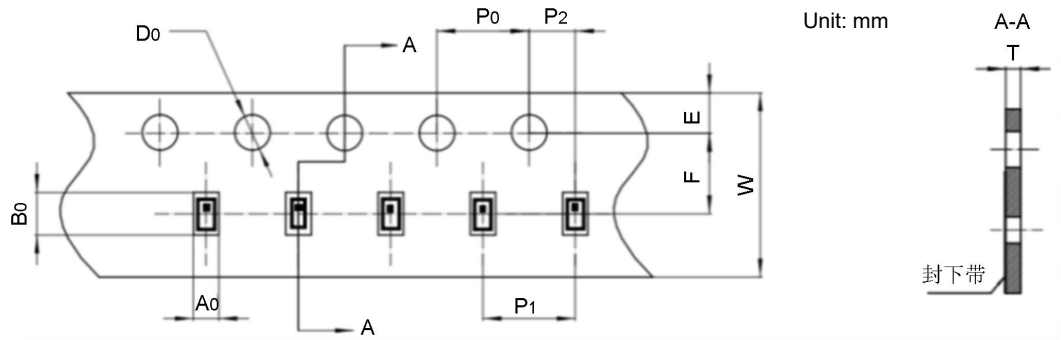

A_0	B_0	W	F	E	P_0	P_1	P_2	D_0	T	10 P_0
1.05 ±0.05	1.80 ±0.05	8.00 ±0.10	3.50 ±0.05	1.75 ±0.10	4.00 ±0.10	4.00 ±0.10	2.00 ±0.05	1.55 ±0.05	0.75 ±0.05	40.00 ±0.10

◆ **Ordering Code**

F	LT	18	D	24254959	D	7299C
FTR device	LTCC Technology	Size: 1608	Diplexer	Working Frequency: 2400-2500 MHz/ 4900-5950 MHz	Terminal electrode	Design code

◆ **Remarks for Package**

Reserve a length of ⩾150mm for the trailer of the carrier and ⩾150mm for the leader of the carrier and further ⩾150mm of cover tape at the leading part of the carrier.

◆ **Reel (5000 pcs/Reel)**

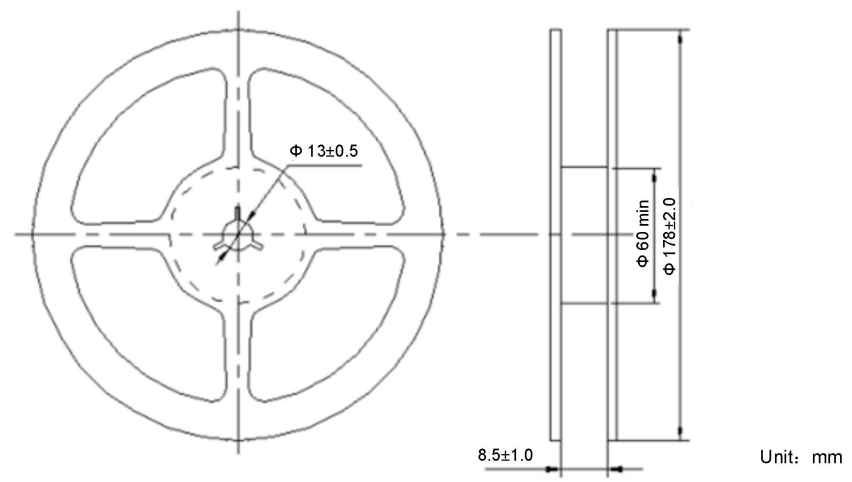

◆ **Storage Period**

Product should be used within 12 months from the day of FTR outgoing inspection.

Storage Temperature Range : +10~+30 degree C, Humidity : 30~70% RH

10. Reliability Test

Test item	Test condition / Test method	Specification
Solderability IEC 60068-2-58 GB/T2423.28	*Solder bath temperature：240±5℃ *Immersion time：2±0.5 sec Solder：Sn96.5 Ag3.0 Cu0.5 for lead-free.	At least 95% of a surface of each terminal electrode must be covered by fresh solder.
Leaching (Resistance to dissolution of metallization) JIS C5101	*Solder bath temperature：260±5℃ *Leaching immersion time：10±1 sec Solder : Sn96.5 Ag3.0 Cu0.5 for lead-free.	Loss of metallization on the edges of each electrode shall not exceed 25%.
Resistance to soldering heat IEC 60068-2-58 GB/T2423.28	*Preheating temperature：120~150℃, 1 minute. *Solder temperature：260±5℃ *Immersion time：10±1 sec Solder：Sn96.5 Ag3.0 Cu0.5 for lead-free Measurement to be made after keeping at room temperature for 24±2 hrs.	No mechanical damage. Electrical specification shall satisfy the descriptions in electrical characteristics at the room temperature. Loss of metallization on the edges of each electrode shall not exceed 25%.
Drop Test IEC 60068-2-32 GB/T2423.8 Customer's specification.	*Height：50 cm *Test Surface: Rigid surface of concrete or steel. *Times：6 surfaces for each units；2 times for each side.	No mechanical damage. Electrical specification shall satisfy the descriptions in electrical characteristics at the room temperature.
Vibration IEC 60068-2-6 GB/T 2423.10	*Frequency：10Hz~55Hz~10Hz(1min) *Total amplitude：1.5mm *Test times：6hrs.(Two hrs each in three mutually perpendicular directions)	No mechanical damage. Electrical specification shall satisfy the descriptions in electrical characteristics at the room temperature.
Adhesive Strength of Termination IEC60068-2-21 GB/T 2423.60	*Pressurizing force： LGA terminal series : 3N(1005)；5N(≥1608) DIP terminal series : 3N(1005)；5N(1608); 10N(≥2012) *Test time:10±1 sec	No remarkable damage or removal of the termination.

Bending test IEC 60068-2-21 GB/T 2423.60	The middle part of substrate shall be pressurized by means of the pressurizing rod at a rate of about 1 mm/s per second until the deflection becomes 2mm and then pressure shall be maintained for 10±1 sec. Measurement to be made after keeping at room temperature for 24±2 hours.	No mechanical damage. Electrical specification shall satisfy the descriptions in electrical characteristics at the room temperature.
Temperature cycle IEC60068-2-14 GB/T 2423.22	30 minutes at-40℃±2℃. 10~15 minutes at room temperature. 30minutes at +85℃±2℃. 10~15 minutes at room temperature. Total 100 continuous cycles Measurement to be made after keeping at room temperature for 24±2 hrs.	No mechanical damage. Electrical specification shall satisfy the descriptions in electrical characteristics at the room temperature.
High temperature IEC 60068-2-2 GB/T2423.2	*Temperature：85±2℃. *Test duration：500+24/-0 hours. Measurement to be made after keeping at room temperature for 24±2 hrs.	No mechanical damage. Electrical specification shall satisfy the descriptions in electrical characteristics.
Humidity (steady conditions) IEC60068-2-3 GB/T 2423.3	*Humidity：85±5%R.H. *Temperature：85±2℃. *Time：500+24/-0 hrs. Measurement to be made after keeping at room temperature for 24±2 hrs ※ 200hrs measuring the first data then 300hrs data.	No mechanical damage. Electrical specification shall satisfy the descriptions in electrical characteristics at the room temperature.
Low temperature IEC 60068-2-1 GB/T2423.1	*Temperature：-40±2℃. *Test duration：500+24/-0 hours Measurement to be made after keeping at room temperature for 24±2 hrs.	No mechanical damage. Electrical specification shall satisfy the descriptions in electrical characteristics at the room temperature.